JETSHEEN

Fuel Filter

ISO 9001:2015 certified
Fuel Filter Manufacturuer
Only Make Best Quality Filters

EUROPEAN MODELS

JETSHEEN

JB2001M

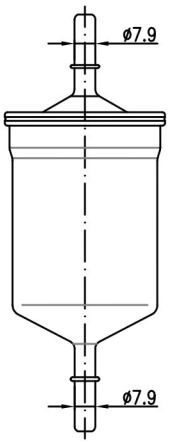

HT:158mm
OD:55.5mm

JB2002M

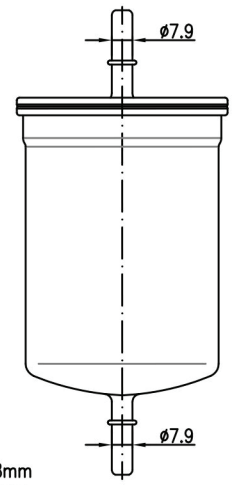

HT:178mm
OD:74mm

JB2004M

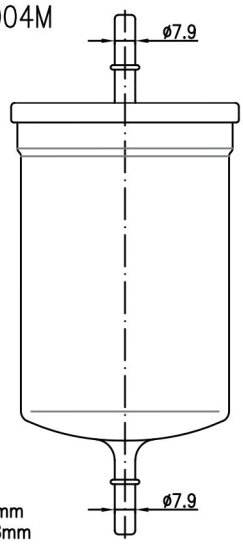

HT:198mm
OD:79.8mm

JB2005

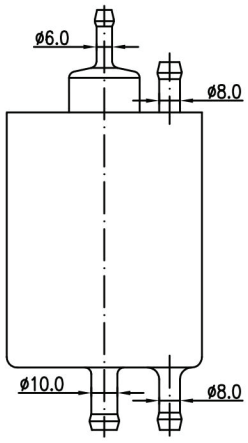

HT:158mm
OD:74.8mm

JB2006

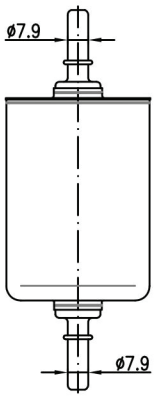

HT:146mm
OD:54.9mm

JB2006P

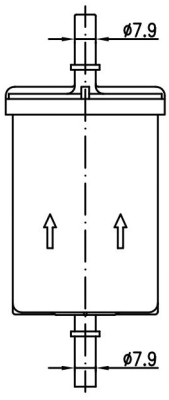

HT:145mm
OD:74mm

JB2007

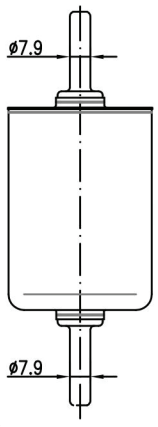

HT:152mm
OD:54.9mm

JB2008

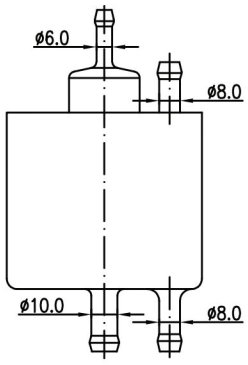

HT:129mm
OD:74.8mm

JB2009

JB2010M

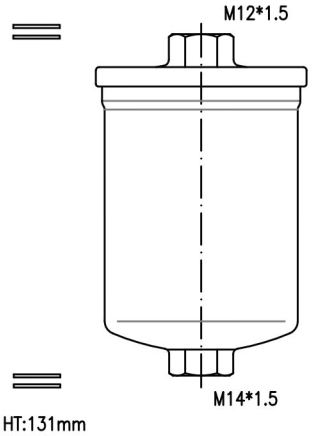

HT:131mm
OD:74mm

JB2011M

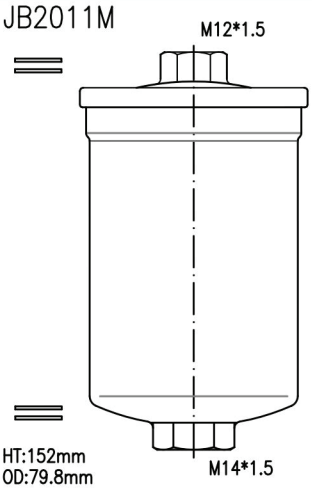

HT:152mm
OD:79.8mm

JB2012M

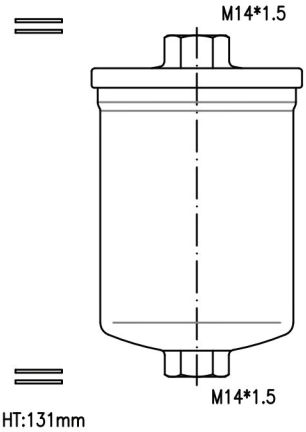

HT:131mm
OD:74mm

JB2014M

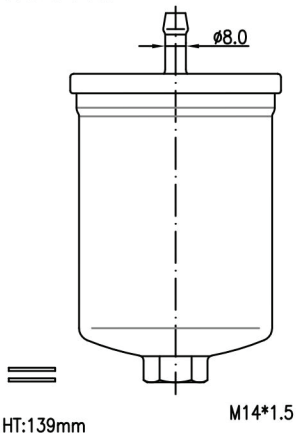

HT:139mm
OD:74mm

JB2015M

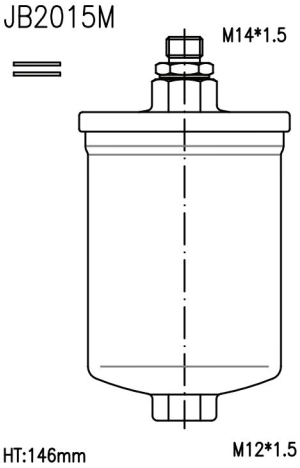

HT:146mm
OD:74mm

JB2016M

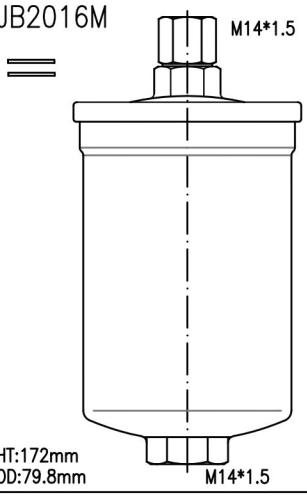

HT:172mm
OD:79.8mm

JB2018M

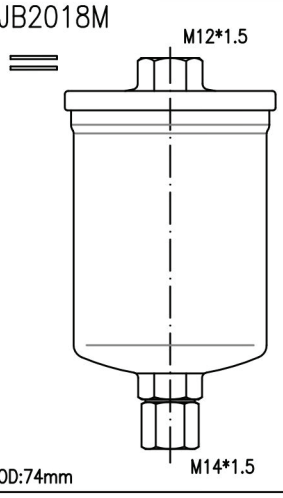

OD:74mm

EUROPEAN MODELS

JETSHEEN®

JB2019M

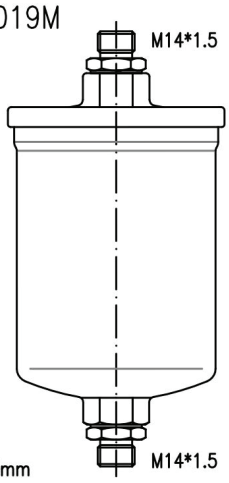

HT:162mm
OD:74mm

JB2020M

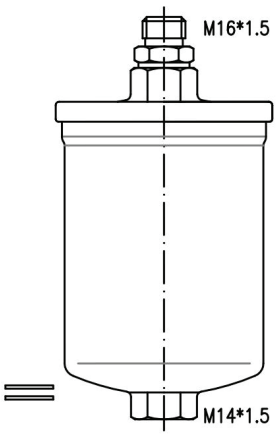

OD:74mm

JB2022M

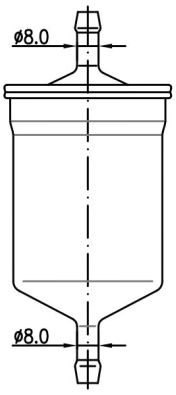

HT:139mm
OD:55.5mm

JB2023M

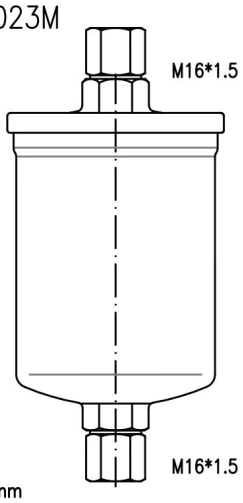

OD:74mm

JB2024M

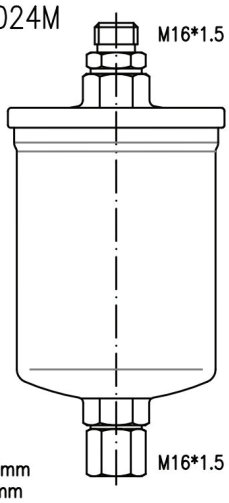

HT:170mm
OD:74mm

JB2026M

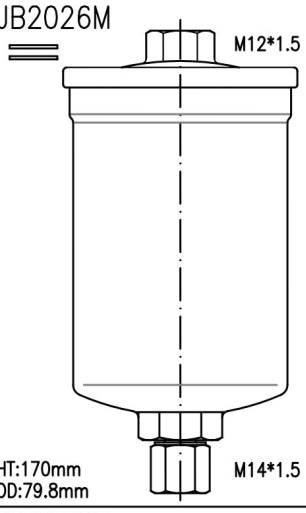

HT:170mm
OD:79.8mm

JB2027M

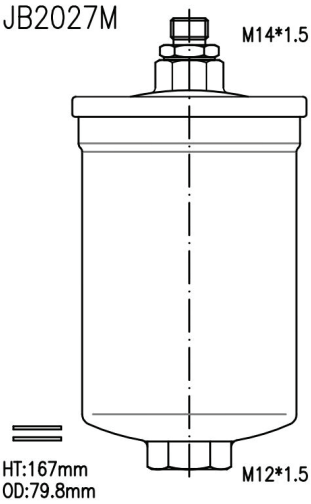

HT:167mm
OD:79.8mm

JB2031M

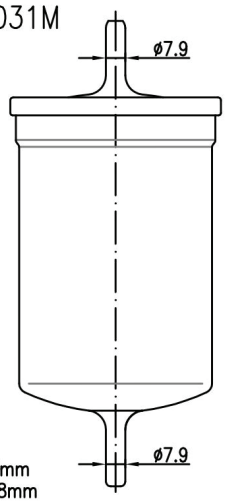

HT:195mm
OD:79.8mm

JB2032M

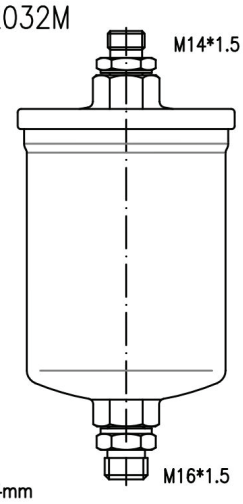

OD:74mm

JB2033M

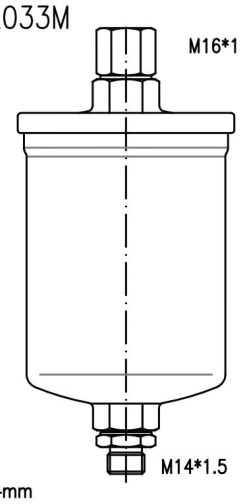

OD:74mm

JB2034M

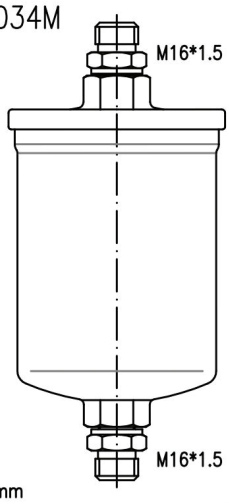

OD:74mm

JB2070M

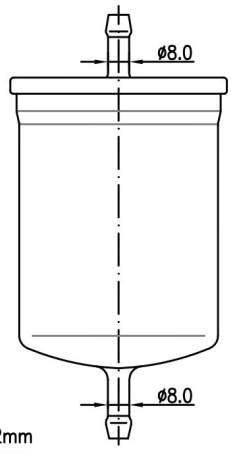

HT:162mm
OD:74mm

JB2072M

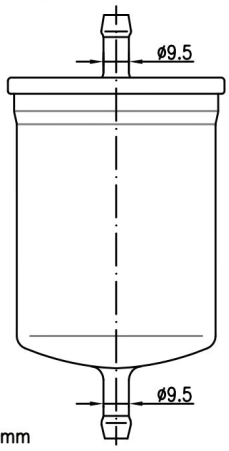

HT:158mm
OD:74mm

JB2102

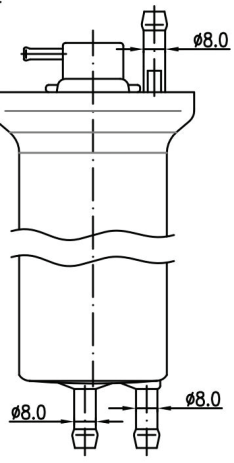

HT:316mm
OD:55mm

JB2103

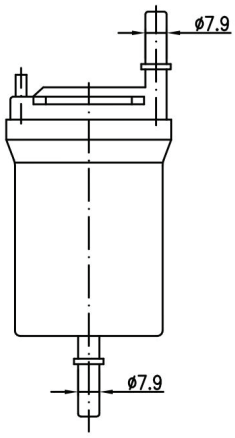

HT:160mm
OD:54.9mm

JB2104

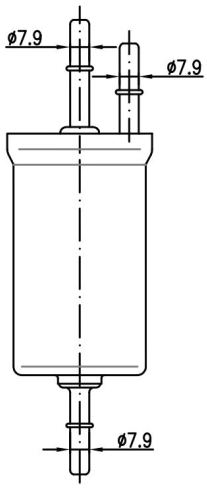

HT:189mm
OD:54.9mm

EUROPEAN MODELS

JETSHEEN

JU008

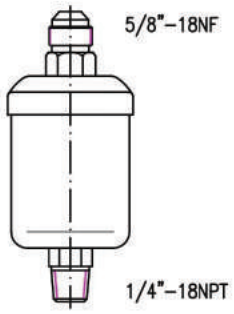

HT:110mm
OD:44mm

JV026

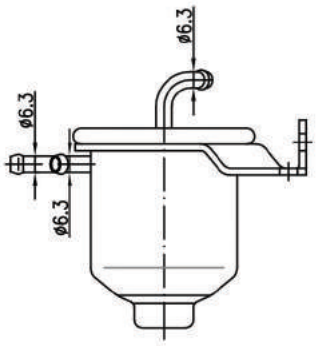

HT:90mm
OD:54.6mm

JV027

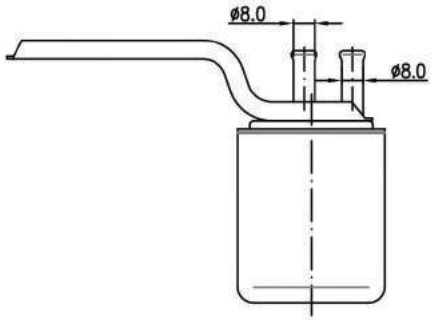

HT:94mm
OD:54.9mm

JV876M

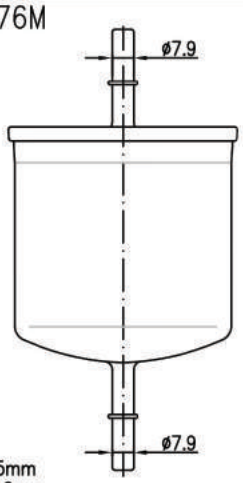

HT:165mm
OD:80.6mm

JV877M

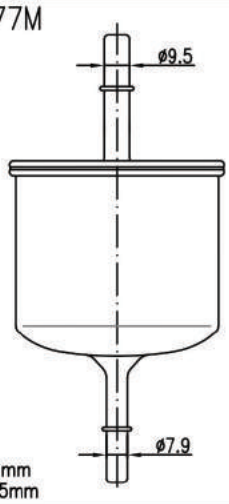

HT:171mm
OD:75.5mm

JV877S

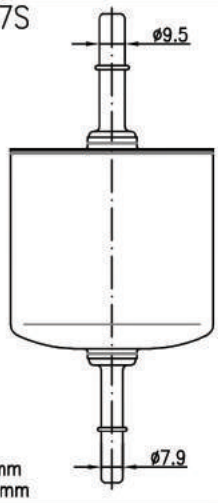

HT:174mm
OD:75.5mm

JV879M

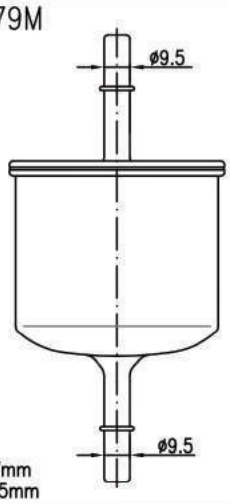

HT:167mm
OD:75.5mm

JV879S

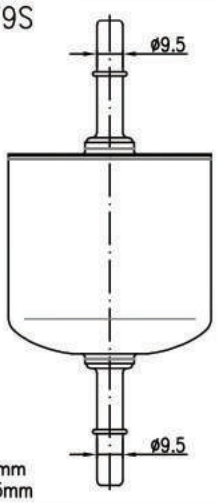

HT:174mm
OD:75.5mm

AMERICAN MODELS

JETSHEEN

JC116

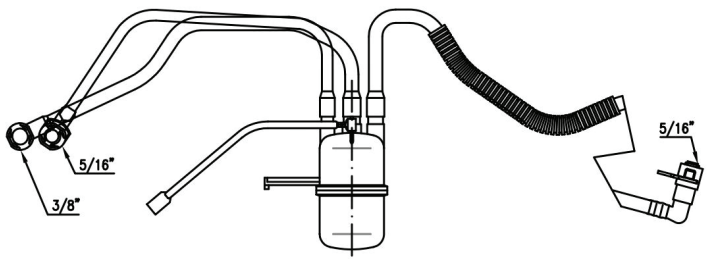

OD:49mm

JC116S

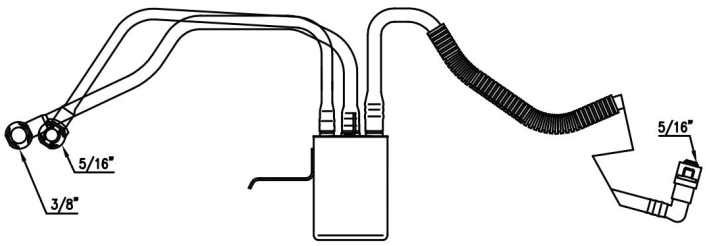

OD:54.9mm

JC117

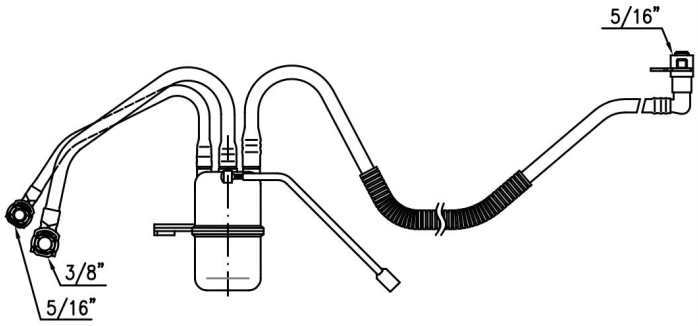

OD:49mm

JC117S

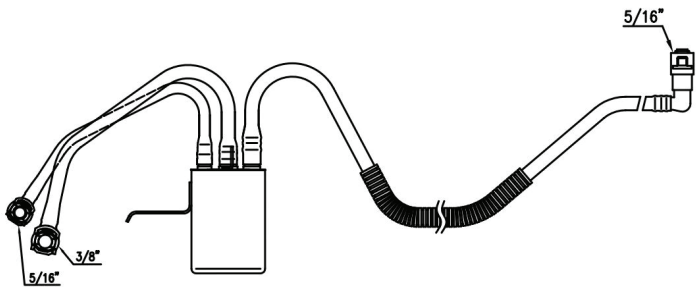

OD:54.9mm

JC118

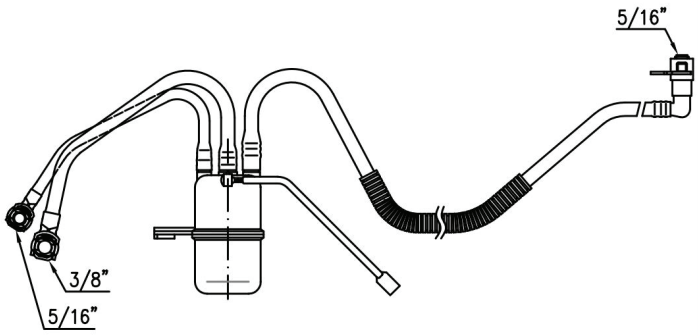

OD:49mm

JC118S

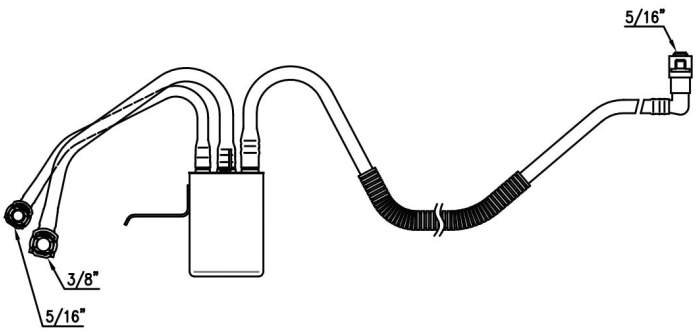

OD:54.9mm

JC269

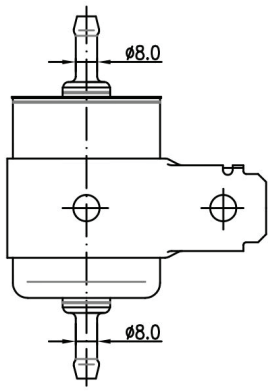

HT:140mm
OD:54.9mm

JC269A

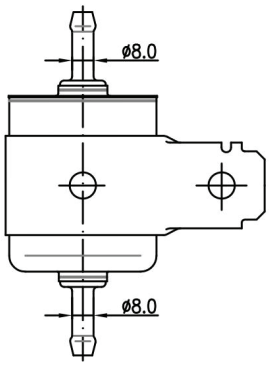

HT:127mm
OD:54.9mm

JC272

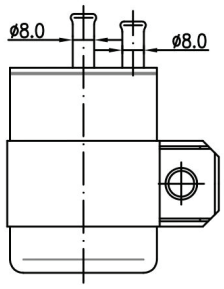

HT:99mm
OD:54.9mm

JC283

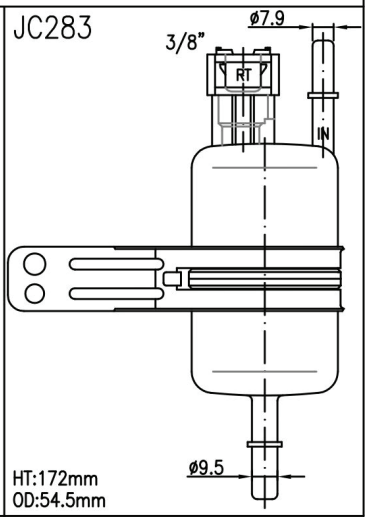

HT:172mm
OD:54.5mm

AMERICAN MODELS

JETSHEEN

JC284

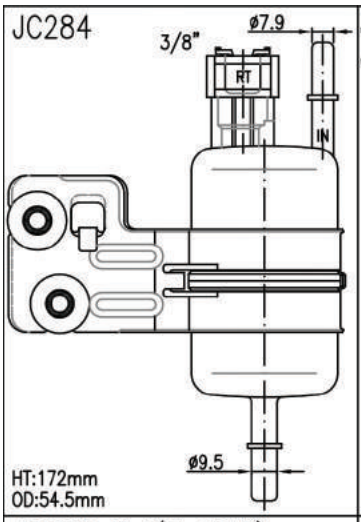

HT:172mm
OD:54.5mm

JC285-3.4(3.4BAR)
JC285-4.0(4.0BAR)

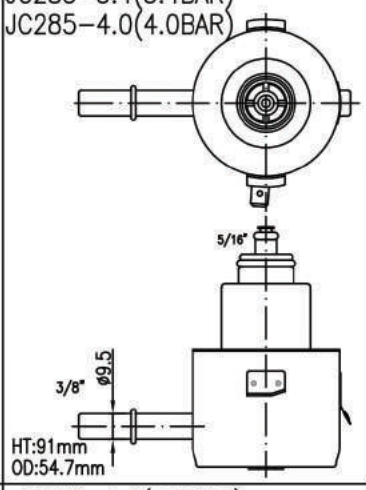

HT:91mm
OD:54.7mm

JC286-3.4(3.4BAR)

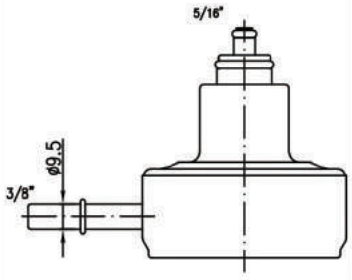

HT:88mm
OD:76mm

JC287-3.4(3.4BAR)
JC287-4.0(4.0BAR)

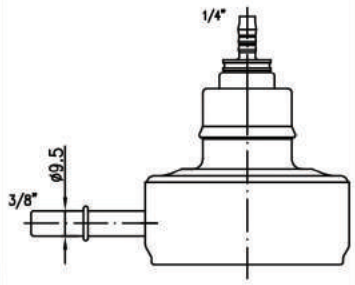

HT:92mm
OD:76mm

JC288-3.4(3.4BAR)

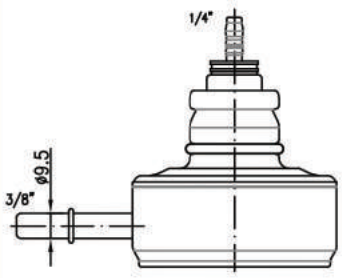

HT:93mm
OD:76mm

JC289-4.0(4.0BAR)

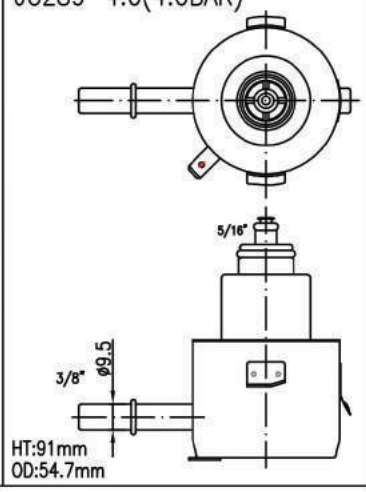

HT:91mm
OD:54.7mm

JC406

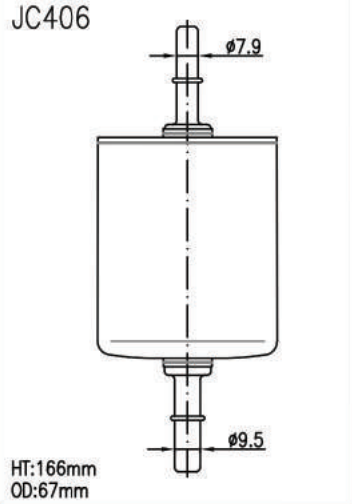

HT:166mm
OD:67mm

JC407

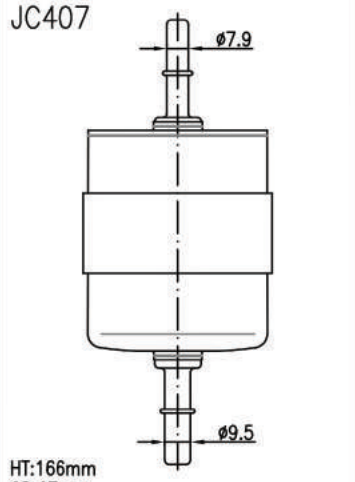

HT:166mm
OD:67mm

JC402

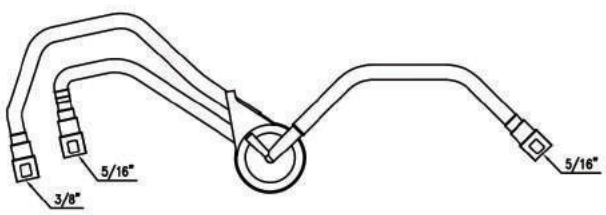

OD:50mm

JC402G

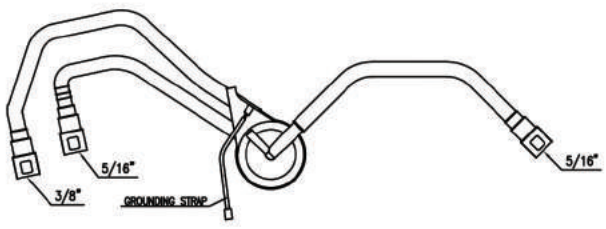

OD:50mm

JC418

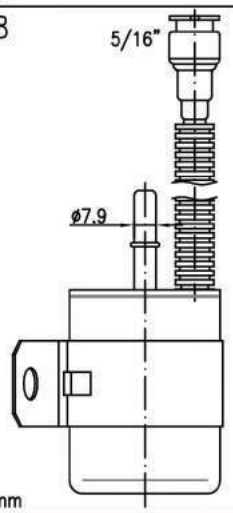

OD:54.9mm

JC419

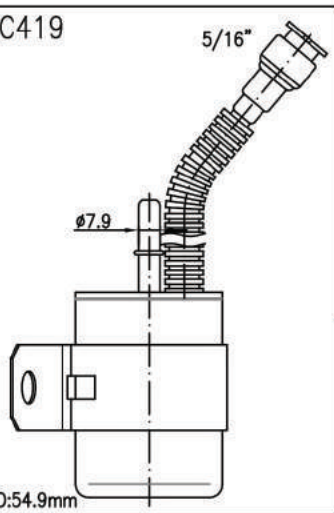

OD:54.9mm

JC430

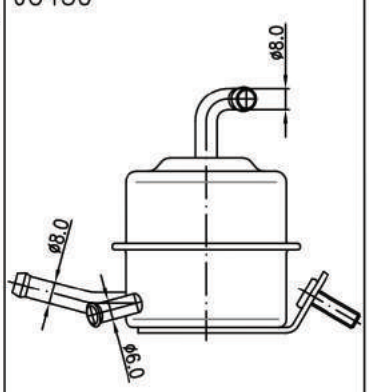

HT:91mm
OD:60mm

JC433

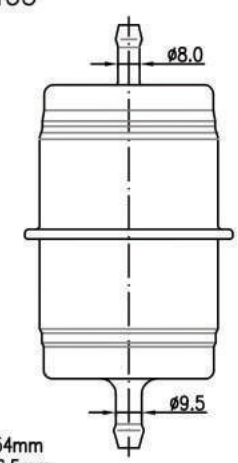

HT:154mm
OD:66.5mm

AMERICAN MODELS

JETSHEEN

JC447

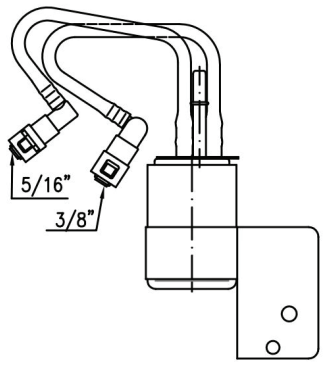

OD:54.9mm

JC452

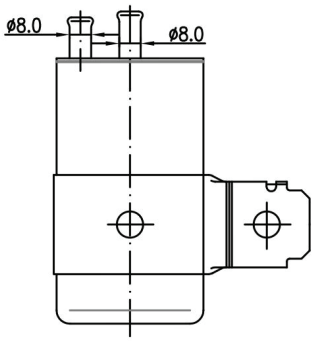

HT:120mm
OD:54.9mm

JC454

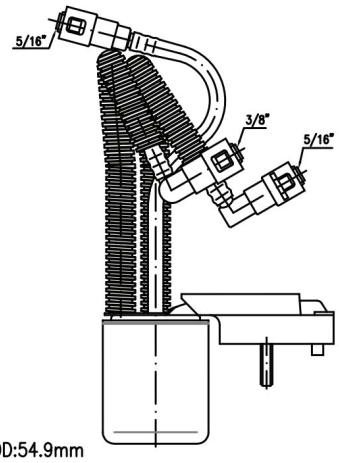

OD:54.9mm

JC455

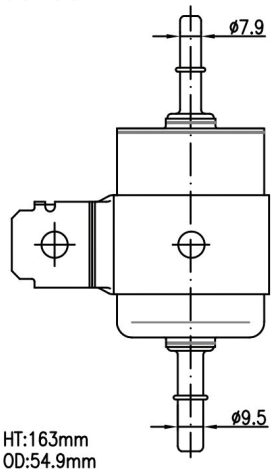

HT:163mm
OD:54.9mm

JC456

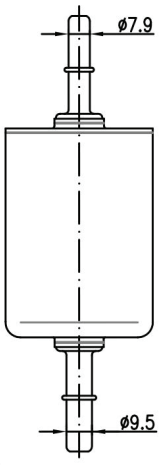

HT:163mm
OD:54.9mm

JC459

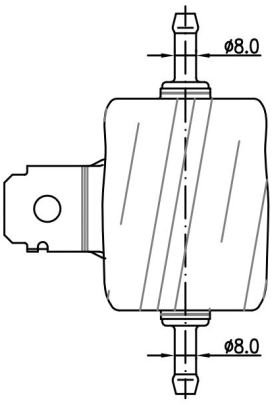

HT:137mm
OD:62mm

JC468

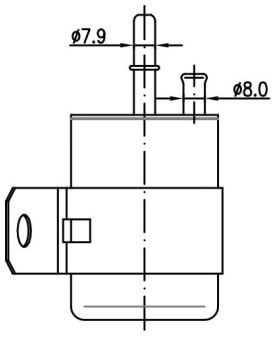

HT:112mm
OD:54.9mm

JC469

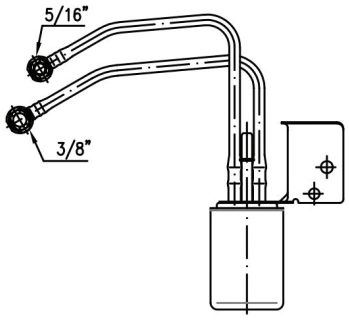

OD:54.9mm

JC472

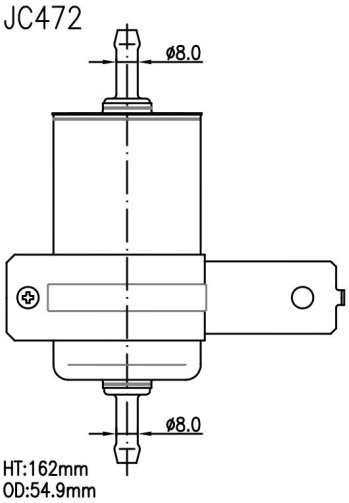

HT:162mm
OD:54.9mm

JC472A

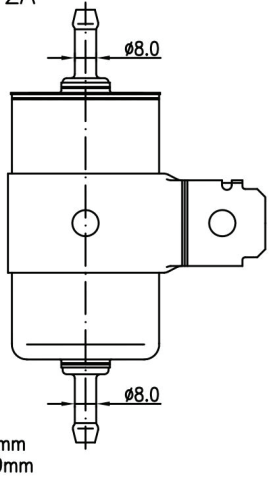

HT:162mm
OD:54.9mm

JC472S

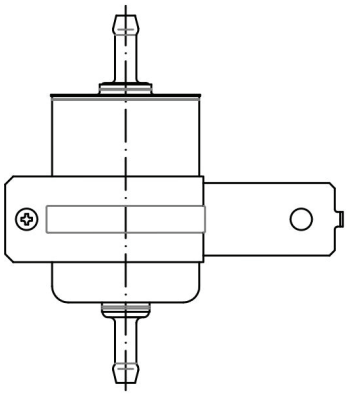

HT:140mm
OD:54.9mm

JC473

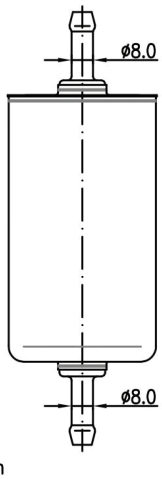

HT:162mm
OD:54.9mm

JC497

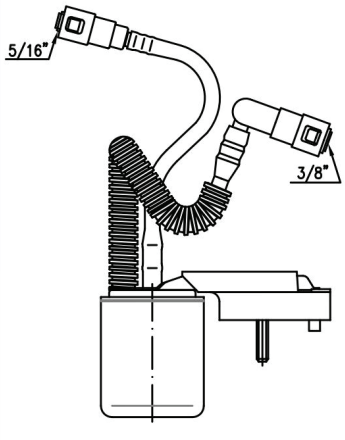

OD:54.9mm

JC498

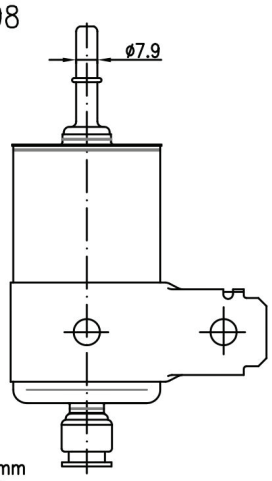

HT:160mm
OD:54.9mm

JC898

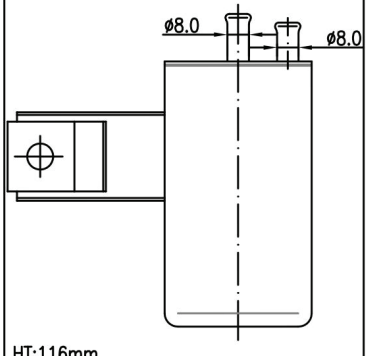

HT:116mm
OD:54.9mm

JC987

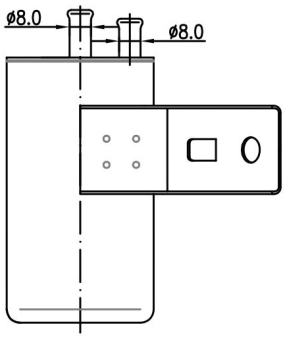

HT:121mm
OD:54.9mm

AMERICAN MODELS

JETSHEEN

JF800M 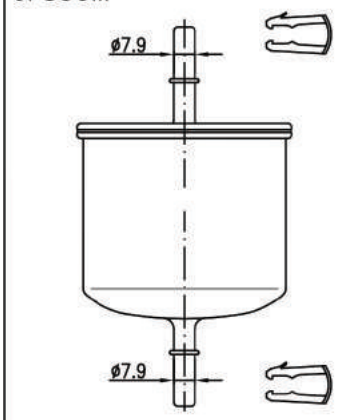 HT:146mm OD:75.5mm	JF800S 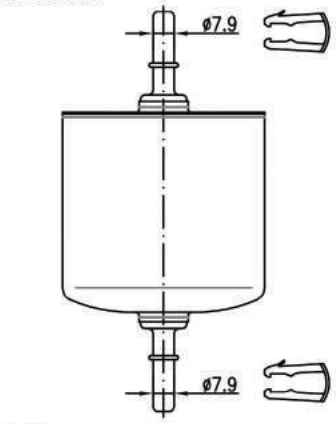 HT:149mm OD:75.5mm	JF810 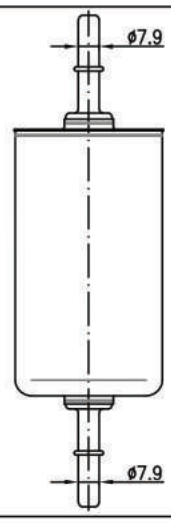 HT:185mm OD:54.9mm	JF810M 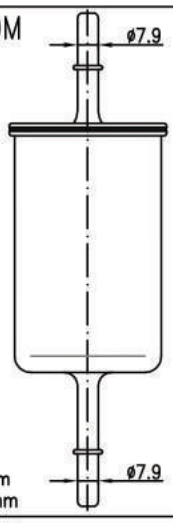 HT:182mm OD:54.7mm
JF811L 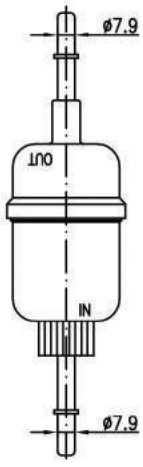 HT:204mm OD:49.7mm	JF811P 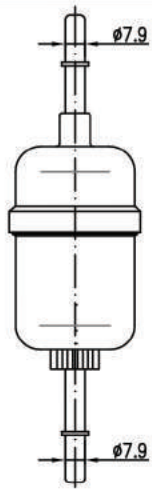 HT:192mm OD:49.7mm	JF813 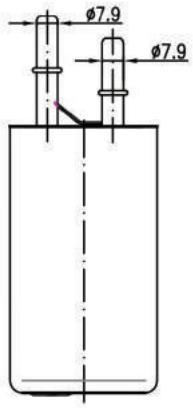 HT:140.5mm OD:54.9mm	JF862M 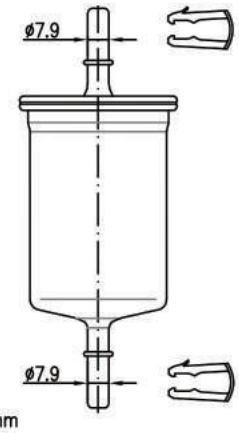 HT:149mm OD:51mm
JF862S 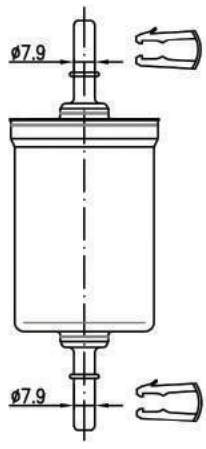 HT:153mm OD:52mm	JF872M 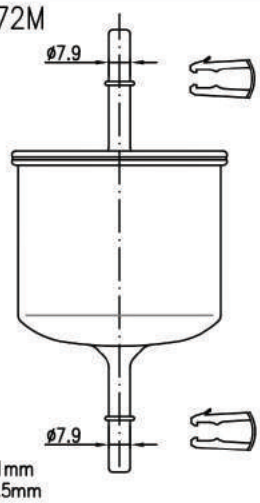 HT:171mm OD:75.5mm	JF872S 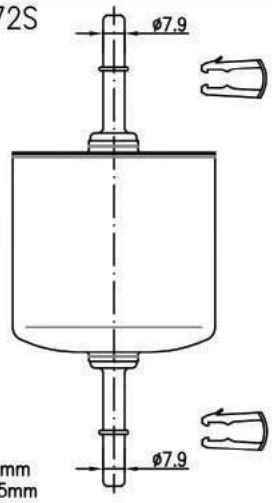 HT:175mm OD:75.5mm	JF880M 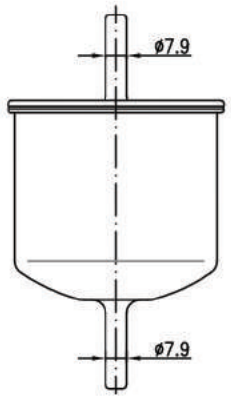 HT:137mm OD:75.5mm
JF880S 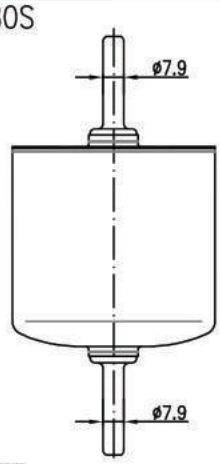 HT:156mm OD:75.5mm	JF881M 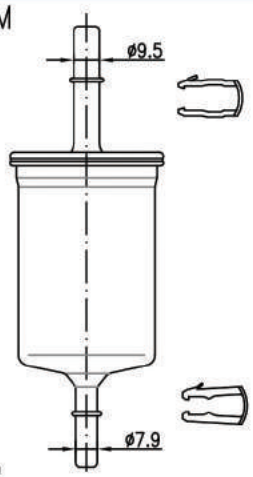 HT:161mm OD:51mm	JF881S 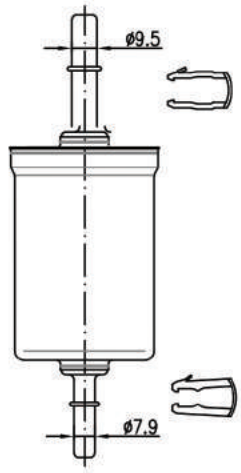 HT:165mm OD:52mm	JF896M 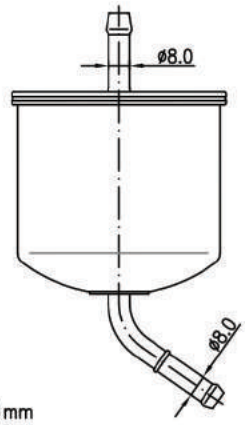 HT:151mm OD:75.5mm

AMERICAN MODELS

JETSHEEN

JF986M

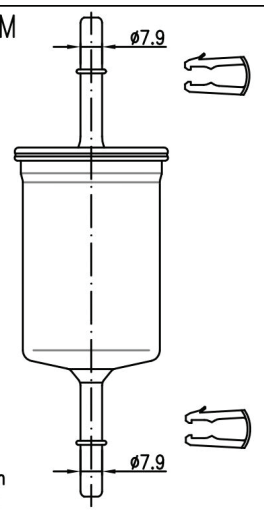

HT:179mm
OD:51mm

JF986S

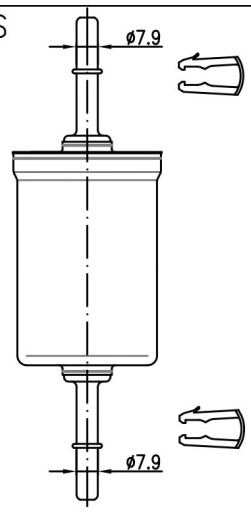

HT:179mm
OD:52mm

JF991M

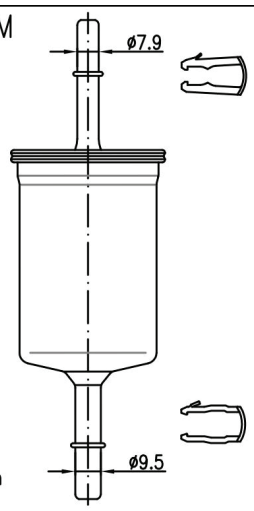

HT:178mm
OD:51mm

JF1011M
(JF1083M)

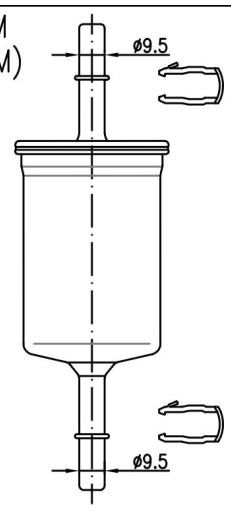

HT:177mm
OD:51mm

JF1011S

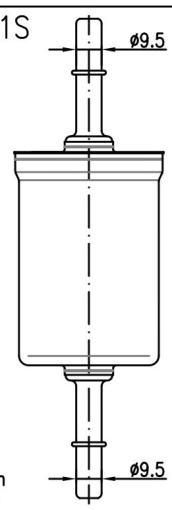

HT:179mm
OD:52mm

JF1036M

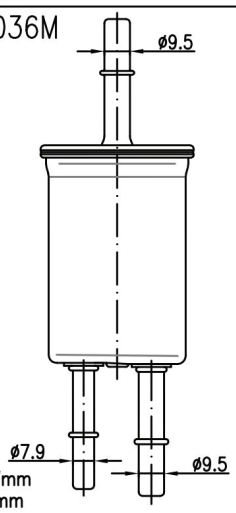

HT:177mm
OD:51mm

JF1036S

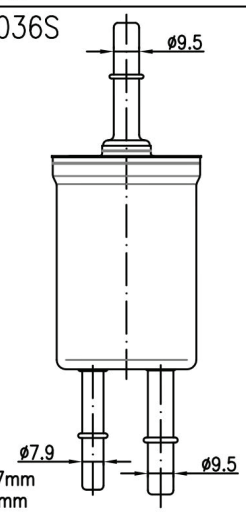

HT:177mm
OD:52mm

JF1039M

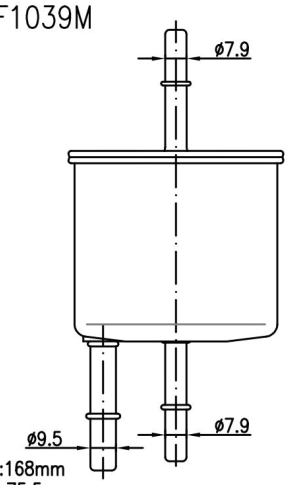

HT:168mm
OD:75.5mm

JF1062M

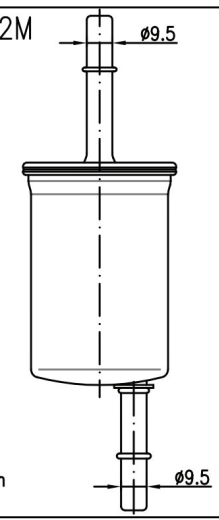

HT:178mm
OD:51mm

JF1070M

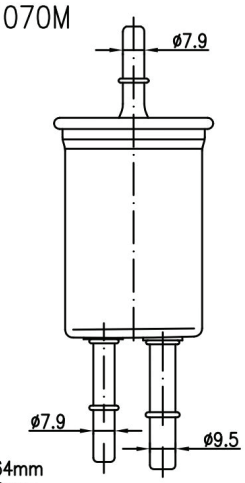

HT:164mm
OD:51mm

JF1071M

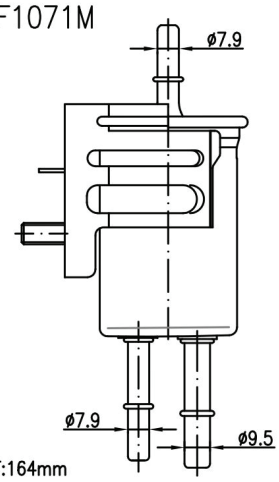

HT:164mm
OD:51mm

JF1071S

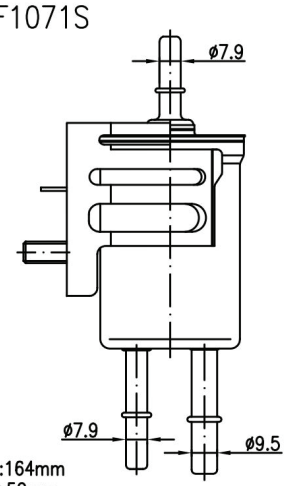

HT:164mm
OD:52mm

JF1072M

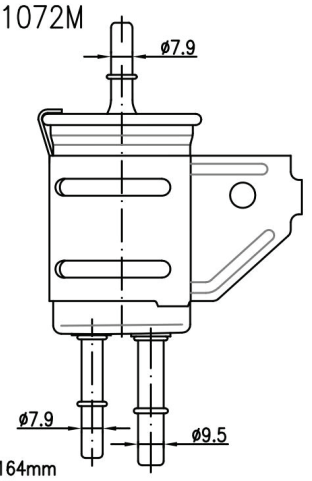

HT:164mm
OD:51mm

JF1072S

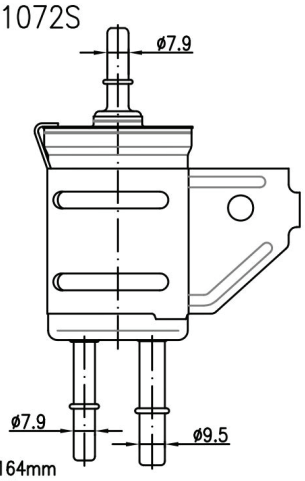

HT:164mm
OD:52mm

JF1081M

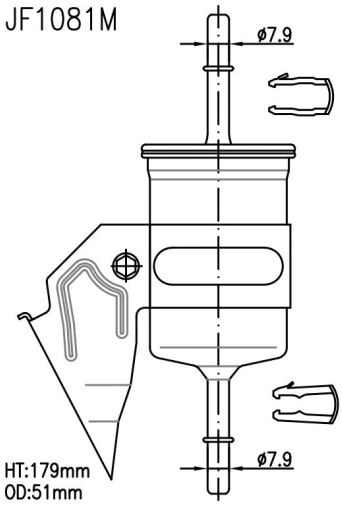

HT:179mm
OD:51mm

JFI140 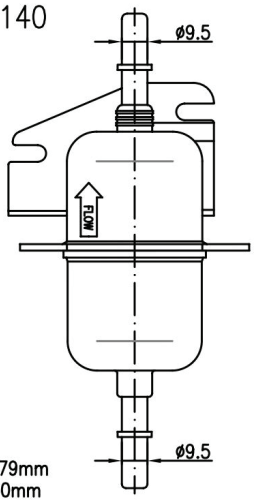 HT:179mm OD:50mm	JFI141 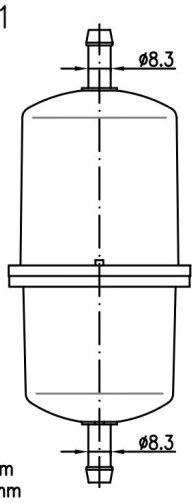 HT:169mm OD:58.6mm		

AMERICAN MODELS

JETSHEEN

JG1/4L

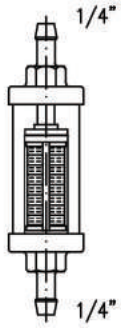

HT:109mm
OD:28mm

JG1/4S

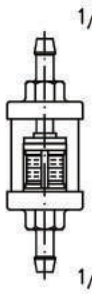

HT:88mm
OD:28mm

JG3/16L

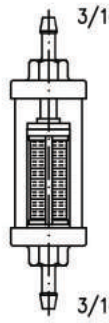

HT:109mm
OD:28mm

JG3/16S

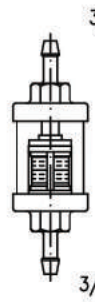

HT:88mm
OD:28mm

JG5/16L

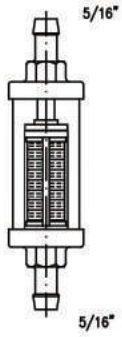

HT:109mm
OD:28mm

JG5/16S

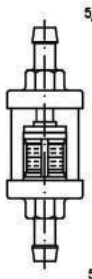

HT:88mm
OD:28mm

JG3/8L

HT:109mm
OD:28mm

JG3/8S

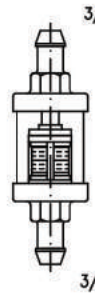

HT:88mm
OD:28mm

JG62L

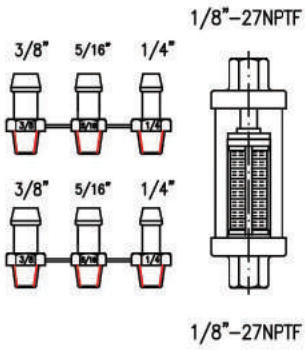

HT:86mm
OD:28mm

JG62S

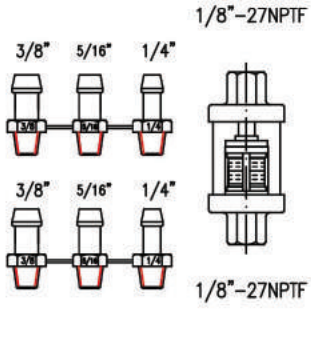

HT:65mm
OD:28mm

JG101

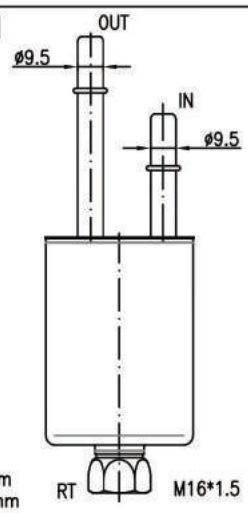

HT:170mm
OD:54.9mm

JG102

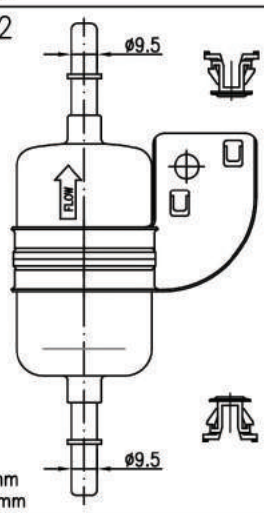

HT:175mm
OD:50.4mm

JG102S

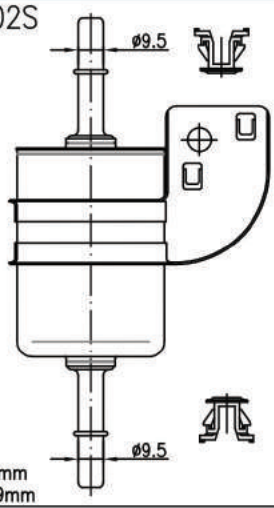

HT:176mm
OD:54.9mm

JG103

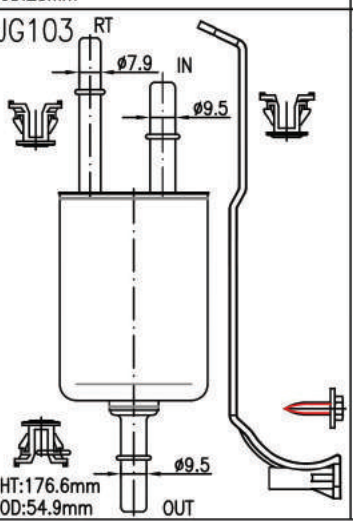

HT:176.6mm
OD:54.9mm

JG104

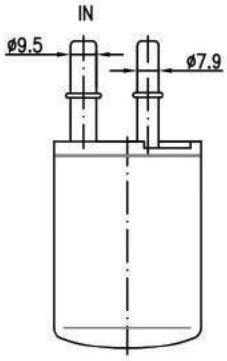

HT:114mm
OD:54.9mm

JG105

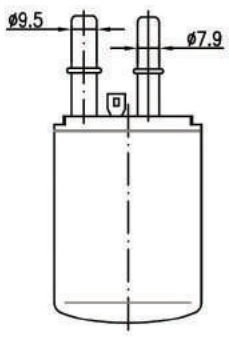

HT:114mm
OD:54.9mm

AMERICAN MODELS

JETSHEEN

JG123

HT:20.5mm
OD:16.4mm

JG380

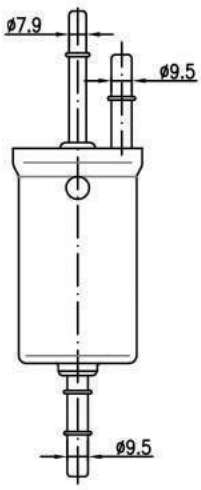

HT:216mm
OD:54.9mm

JG476

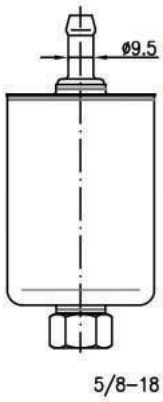

HT:122mm
OD:54.9mm

JG477

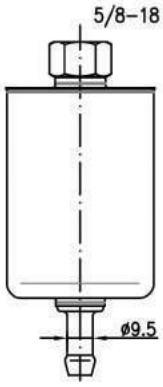

HT:122mm
OD:54.9mm

JG481

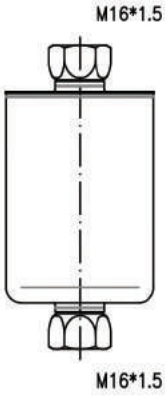

HT:112mm
OD:54.9mm

JG482

HT:137mm
OD:54.9mm

JG483

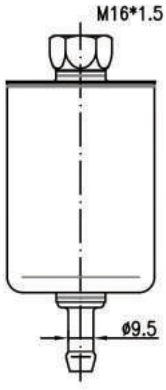

HT:125mm
OD:54.9mm

JG516

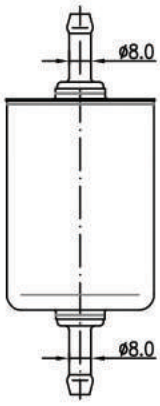

HT:139mm
OD:54.9mm

JG516M

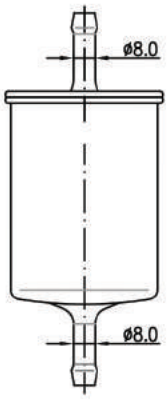

HT:139mm
OD:54.7mm

JG516A

HT:127mm
OD:54.9mm

JG561

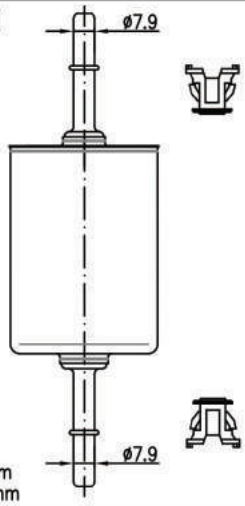

HT:177mm
OD:54.9mm

JG562

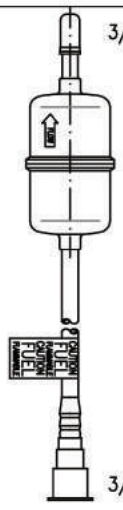

HT:447mm
OD:50mm

JG563

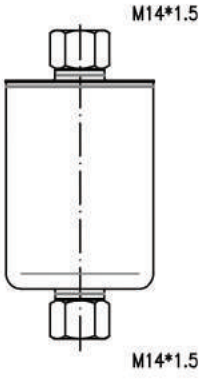

HT:115mm
OD:54.9mm

JG563A

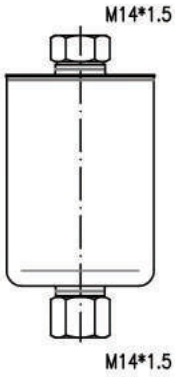

HT:111mm
OD:54.9mm

JG575

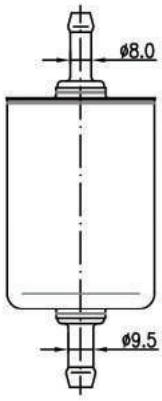

HT:140mm
OD:54.9mm

JG578

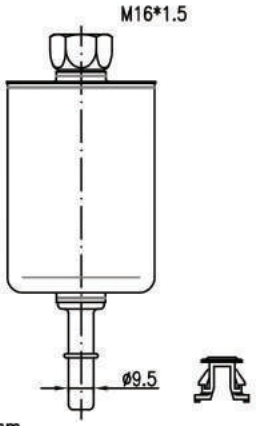

HT:136mm
OD:54.9mm

AMERICAN MODELS

JETSHEEN

JG580

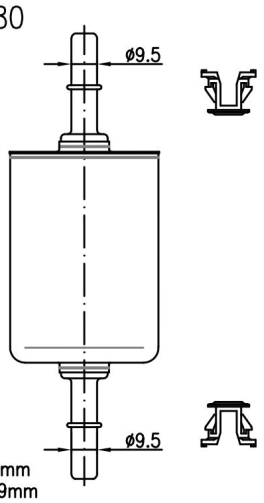

HT:161mm
OD:54.9mm

JG580A

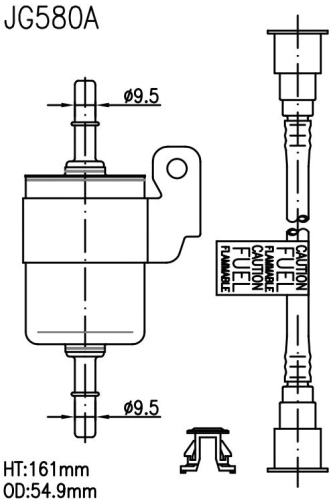

HT:161mm
OD:54.9mm

JG580M

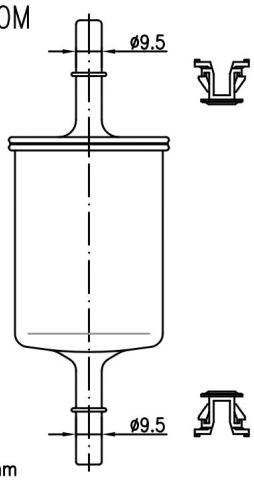

HT:164mm
OD:54.7mm

JG580K

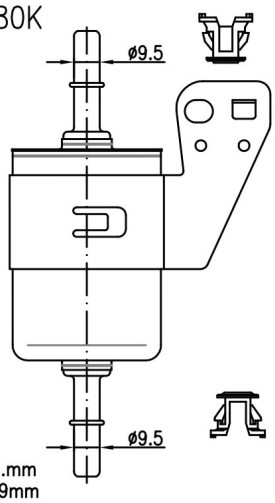

HT:161.mm
OD:54.9mm

JG580L

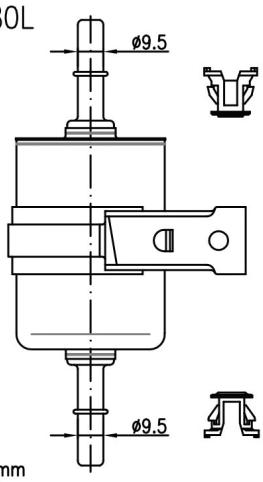

HT:161mm
OD:54.9mm

JG611U

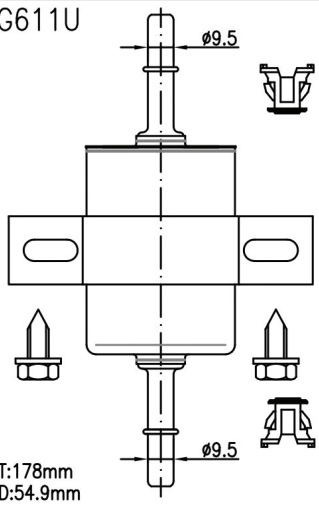

HT:178mm
OD:54.9mm

JG613

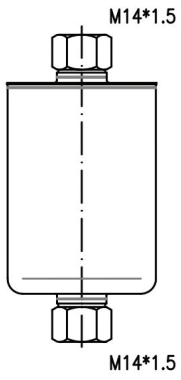

HT:112mm
OD:54.9mm

JG618

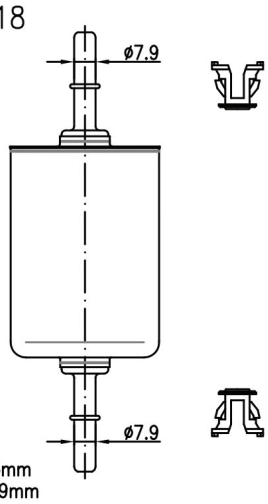

HT:163mm
OD:54.9mm

JG618M

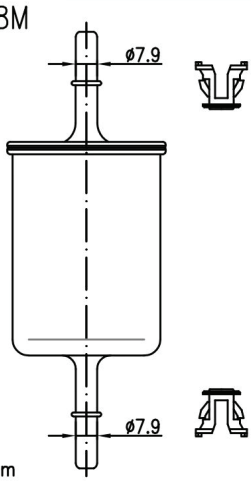

HT:163mm
OD:54.7mm

JG618B

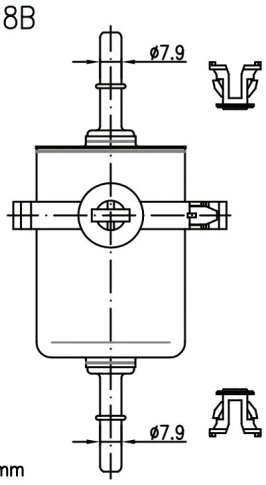

HT:163mm
OD:54.9mm

JG618MB

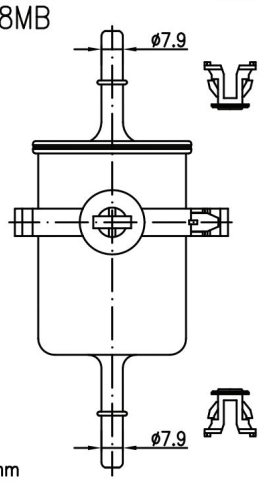

HT:163mm
OD:54.7mm

JG625

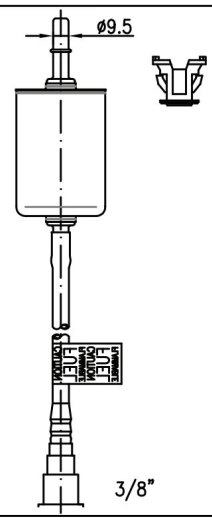

OD:54.9mm

JG644

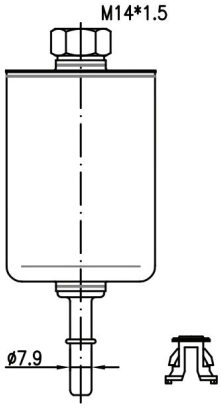

HT:139mm
OD:54.9mm

JG645

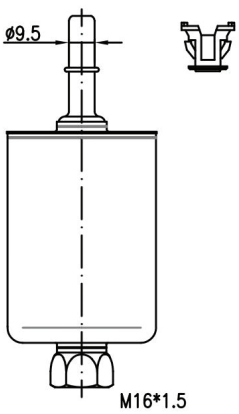

HT:137mm
OD:54.9mm

JG650

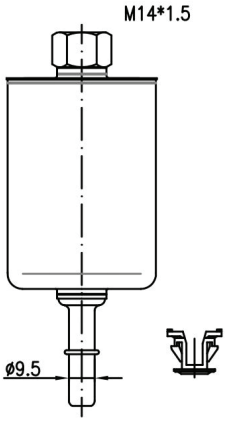

HT:137mm
OD:54.9mm

AMERICAN MODELS

JETSHEEN

JG702

HT:19mm
OD:16mm

JG703

HT:38mm
OD:16mm

JG744

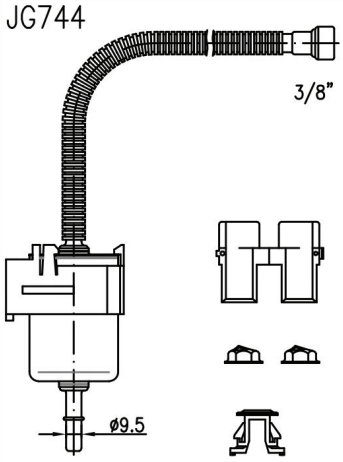

OD:54.9mm

JG745

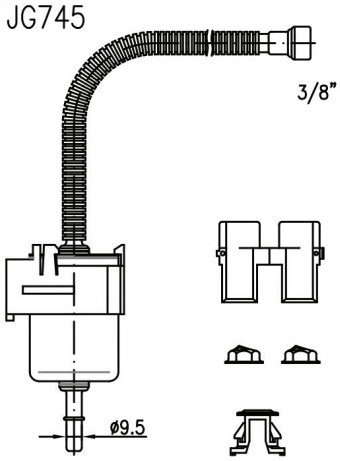

OD:54.9mm

JG746

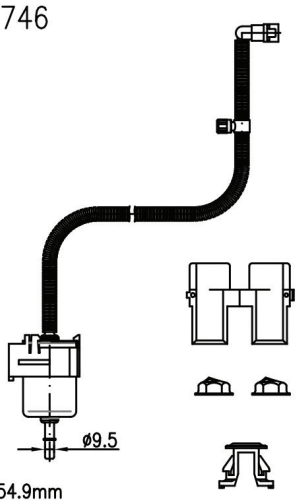

OD:54.9mm

JG819

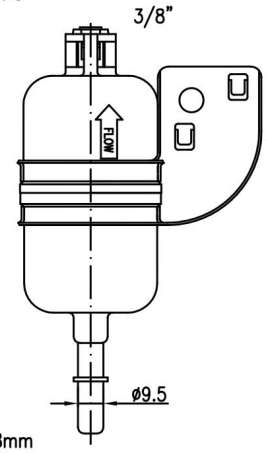

HT:148mm
OD:49.5mm

JG820

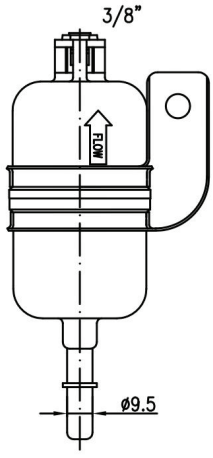

HT:148mm
OD:49.5mm

JG821

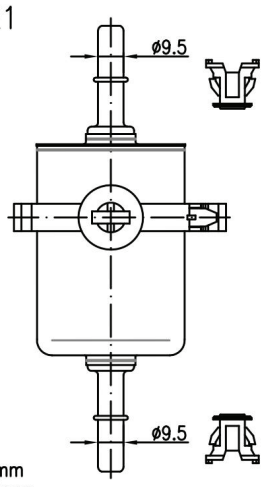

HT:161mm
OD:54.9mm

JG822

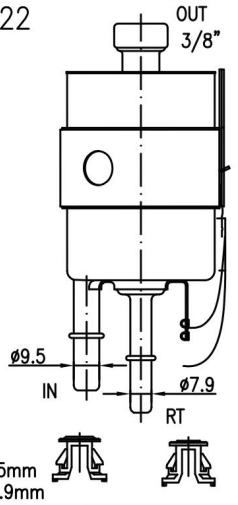

HT:145mm
OD:54.9mm

JG824

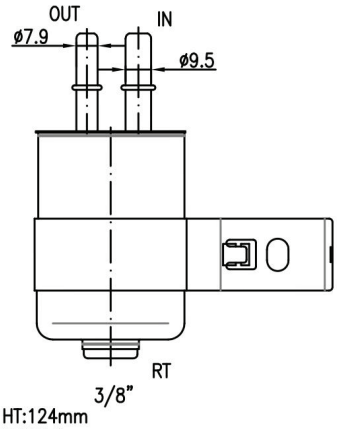

HT:124mm
OD:54.9mm

JG829

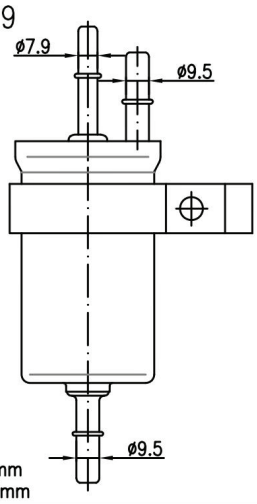

HT:189mm
OD:54.9mm

JG831

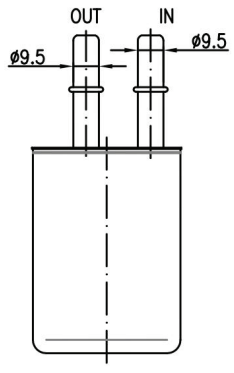

HT:118mm
OD:54.9mm

JG845

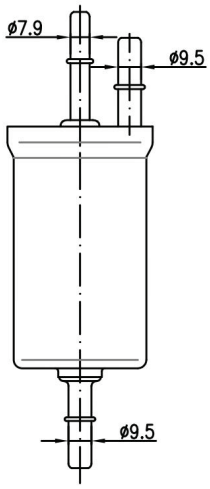

HT:189mm
OD:54.9mm

JG897

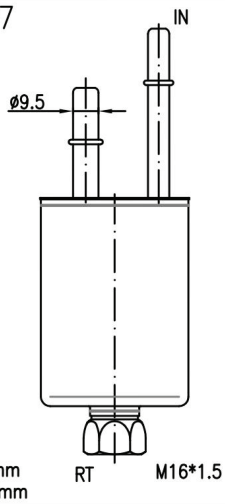

HT:161mm
OD:54.9mm

JAPANESE MODELS

JETSHEEN

JH500

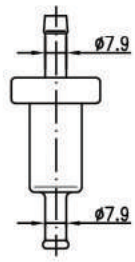

HT:86mm
OD:33mm

JH501

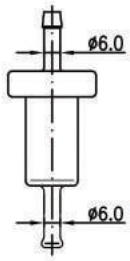

HT:88mm
OD:33mm

JH502

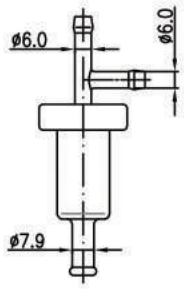

HT:97mm
OD:33mm

JH503

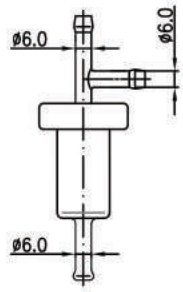

HT:96mm
OD:33mm

JH505

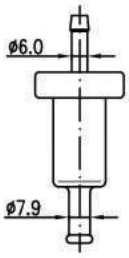

HT:85mm
OD:33mm

JN304M

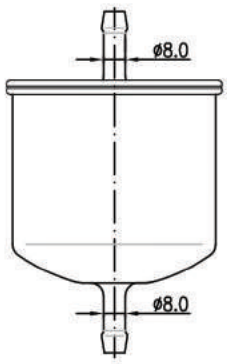

HT:128mm
OD:75.5mm

JN304S

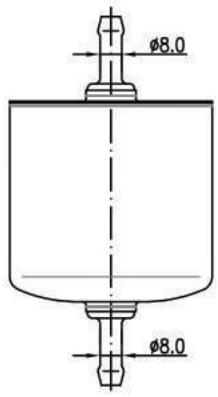

HT:138mm
OD:75.5mm

JN309

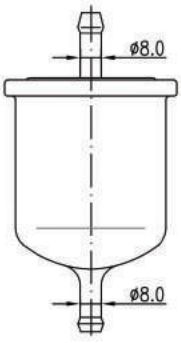

HT:121mm
OD:56mm

JN309M

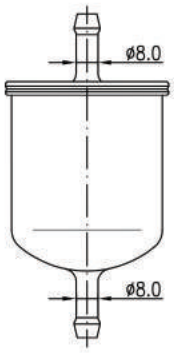

HT:119mm
OD:56mm

JN311

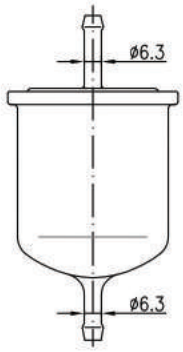

HT:125mm
OD:56mm

JN311M

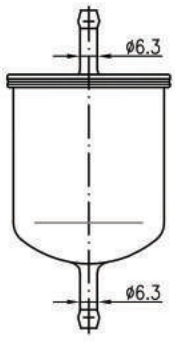

HT:118mm
OD:56mm

JN312

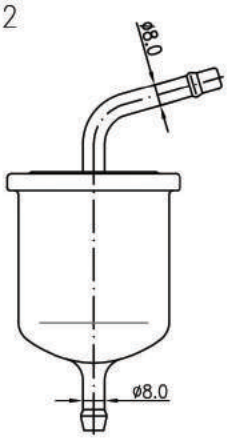

HT:133mm
OD:56mm

JN312M

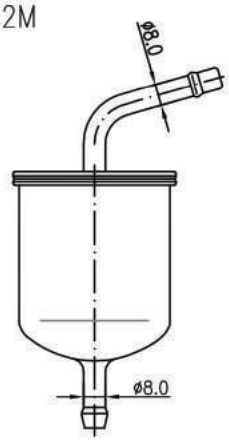

HT:133mm
OD:56mm

JN316

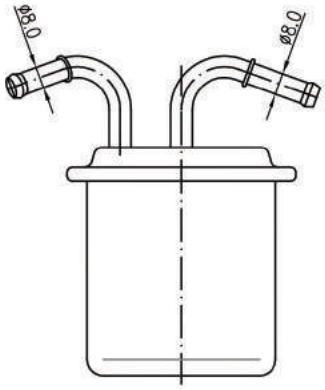

HT:120mm
OD:70mm

JN317

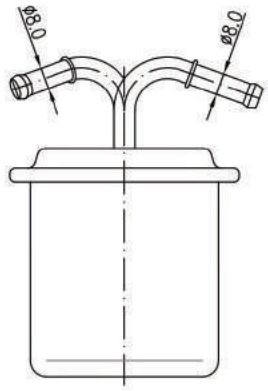

HT:120mm
OD:70mm

JETSHEEN®

JN341 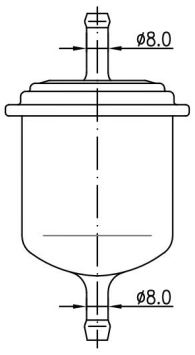 HT:121mm OD:56mm	JN342 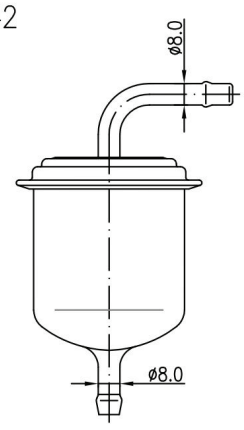 HT:127mm OD:56mm		

JAPANESE MODELS

JETSHEEN

JN3060

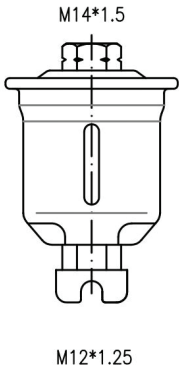

HT:97mm
OD:51mm

JN3061

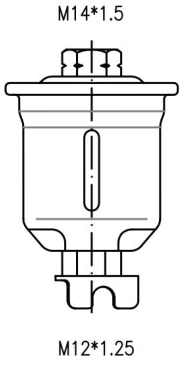

HT:97mm
OD:51mm

JN3062

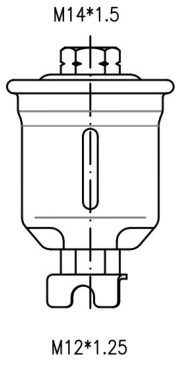

HT:97mm
OD:51mm

JN3063

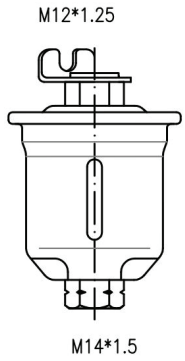

HT:97mm
OD:51mm

JN3064

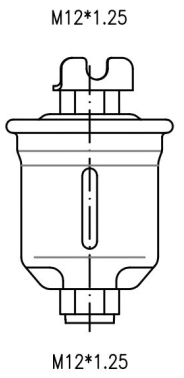

HT:97mm
OD:51mm

JN3065

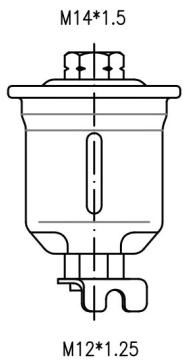

HT:97mm
OD:51mm

JN3201

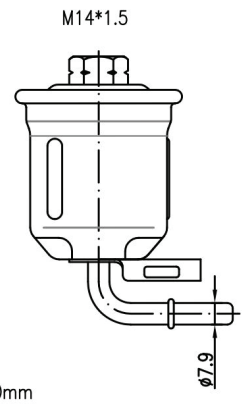

HT:100mm
OD:51mm

JN3202

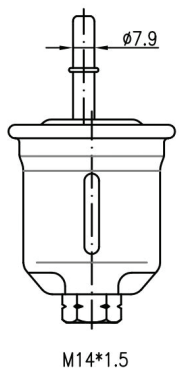

HT:114mm
OD:51mm

JN3203

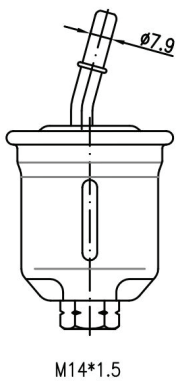

HT:118mm
OD:51mm

JN3204

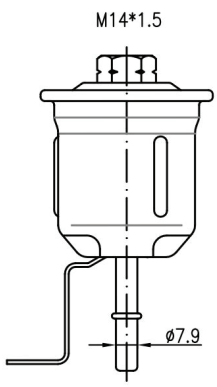

HT:119mm
OD:51mm

JN3205

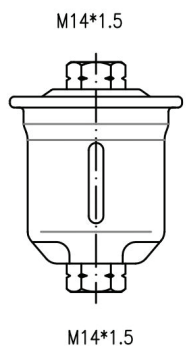

HT:85mm
OD:51mm

JN3206

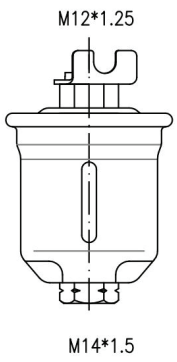

HT:97mm
OD:51mm

JN3207

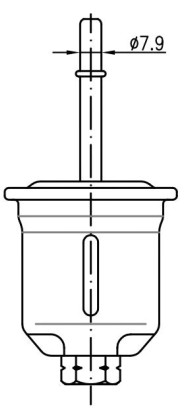

HT:136mm
OD:51mm

JN3208

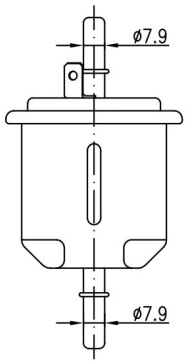

HT:123mm
OD:54mm

JN3209

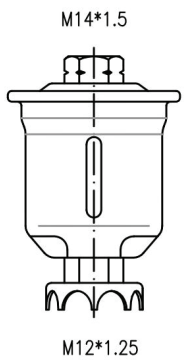

HT:95mm
OD:51mm

JN3210

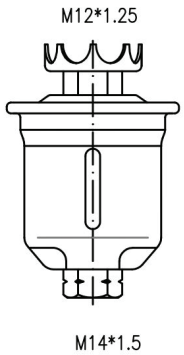

HT:95mm
OD:51mm

JETSHEEN

JN3211 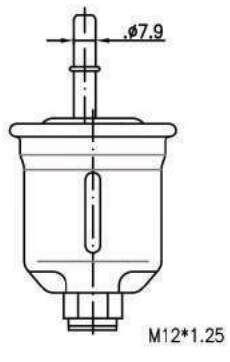 HT:118mm OD:51mm	JN3213 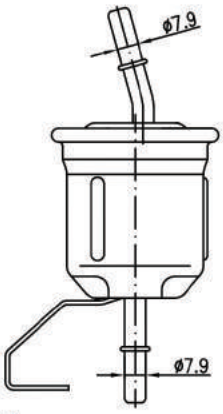 HT:148mm OD:51mm	JN3214 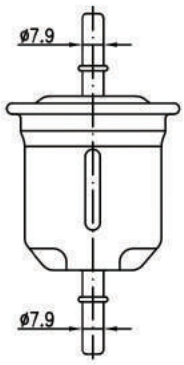 HT:127mm OD:51mm	JN3215 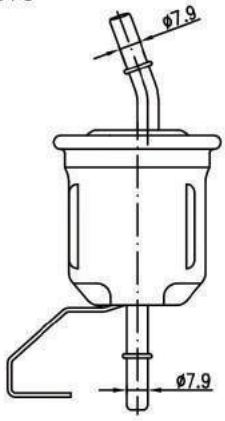 HT:143mm OD:51mm
JN3216 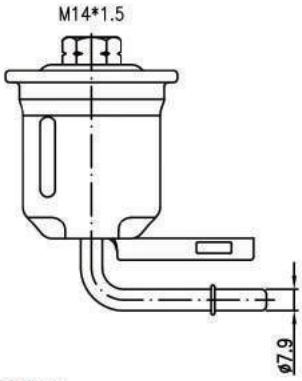 HT:101mm OD:51mm	JN3217 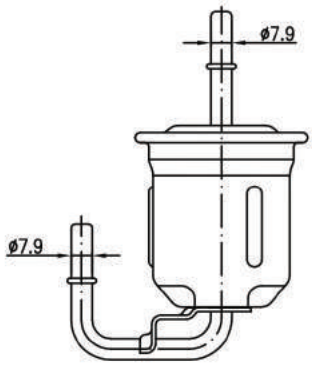 HT:130mm OD:51mm	JN3218 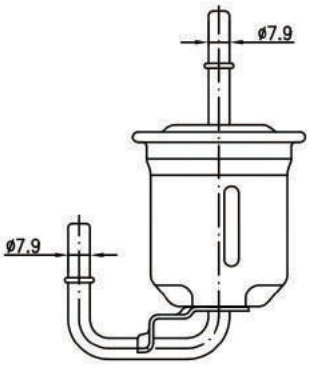 HT:130mm OD:51mm	JN3218B 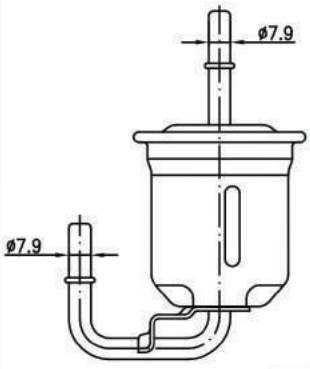 HT:130mm OD:51mm

JAPANESE MODELS

JETSHEEN

JN6001

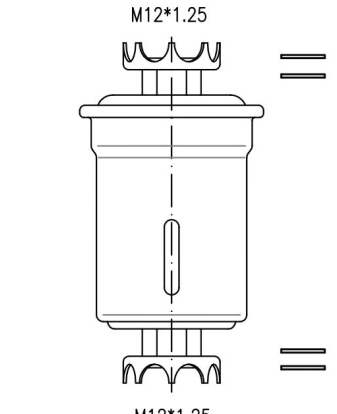

HT:127mm
OD:56mm

JN6002

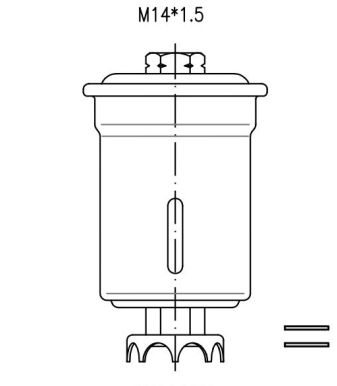

HT:118mm
OD:56mm

JN6003

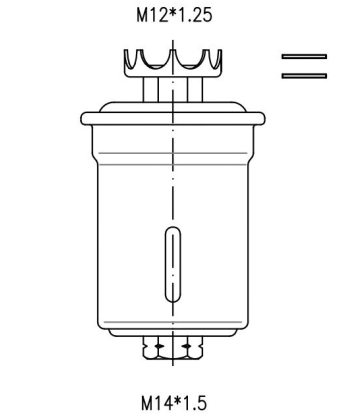

HT:118mm
OD:56mm

JN6004

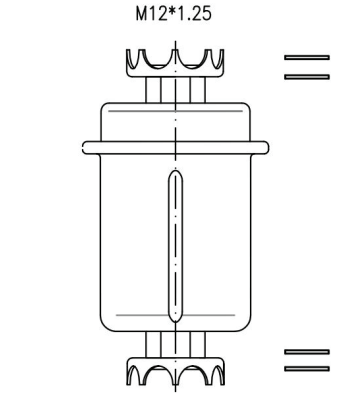

HT:125mm
OD:56mm

JN6005

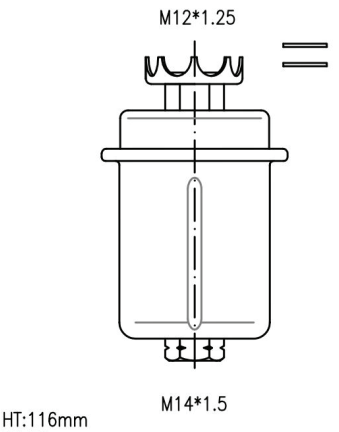

HT:116mm
OD:56mm

JN6006

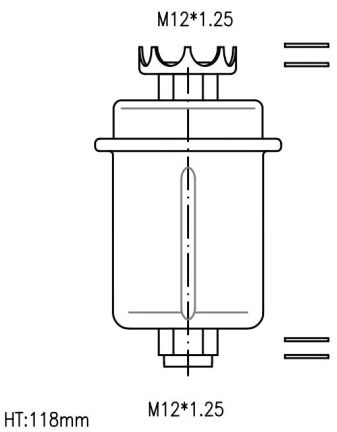

HT:118mm
OD:56mm

JN6031

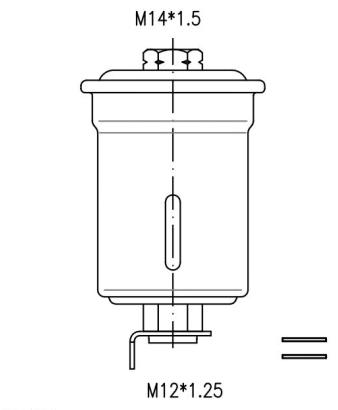

HT:120mm
OD:56mm

JN6032

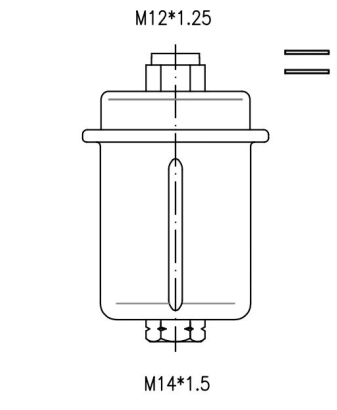

HT:108mm
OD:56mm

JN6033

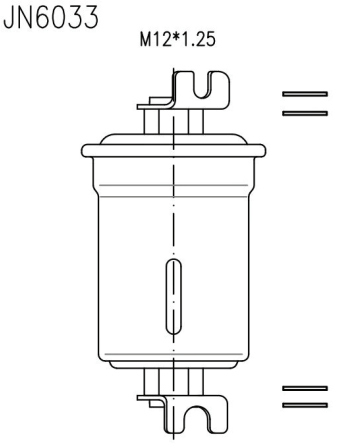

HT:131mm
OD:56mm

JN6034

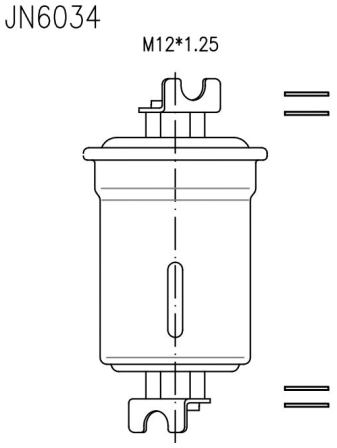

HT:131mm
OD:56mm

JN6035

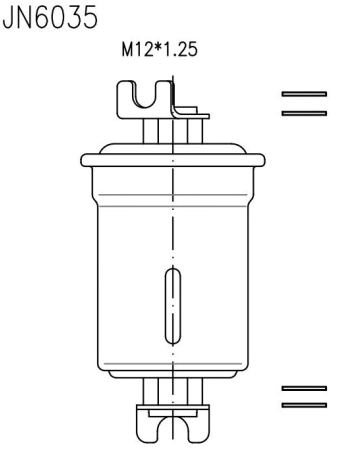

HT:131mm
OD:56mm

JN6036

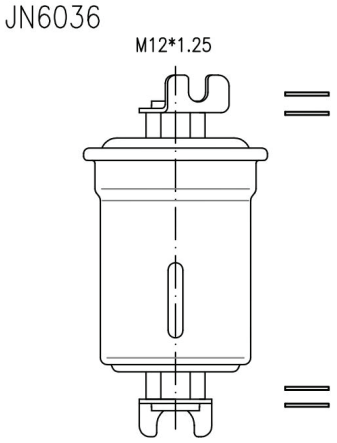

HT:131mm
OD:56mm

JN6037

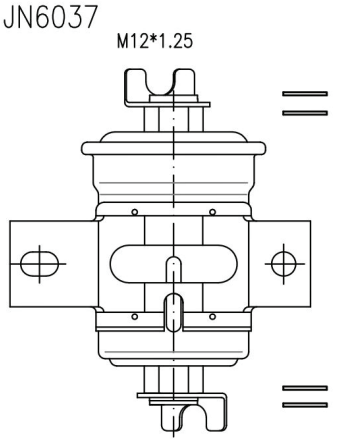

HT:131mm
OD:56mm

JN6038

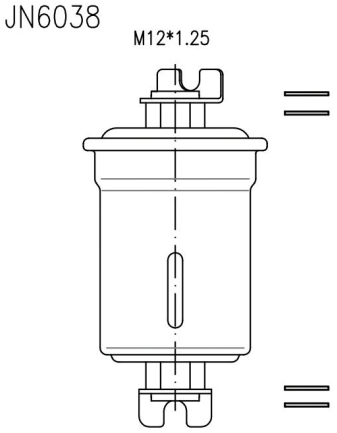

HT:131mm
OD:56mm

JN6039

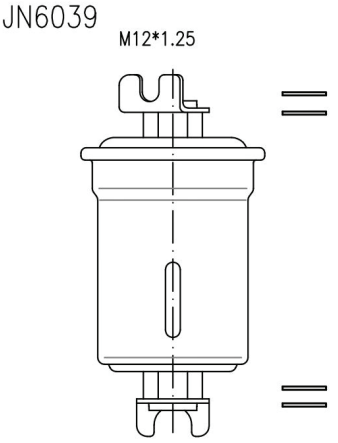

HT:131mm
OD:56mm

JN6040

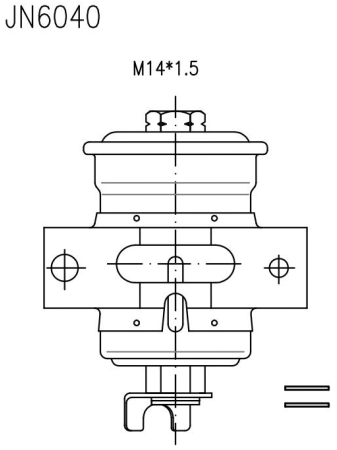

HT:121mm
OD:56mm

JAPANESE MODELS

JETSHEEN

JN6041 M12*1.25 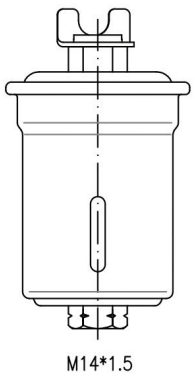 M14*1.5 HT:121mm OD:56mm	JN6042 M14*1.5 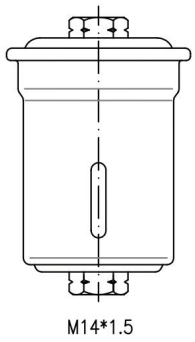 M14*1.5 HT:110mm OD:56mm	JN6043 M12*1.25 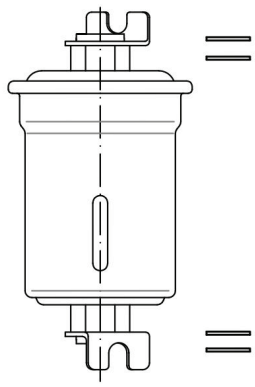 HT:131mm OD:56mm M12*1.25	JN6044 M14*1.5 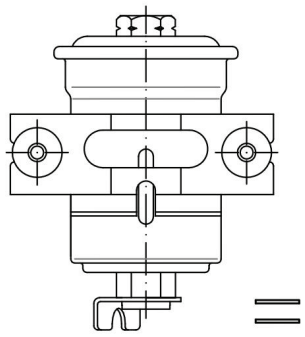 HT:121mm OD:56mm M12*1.25
JN6045 M14*1.5 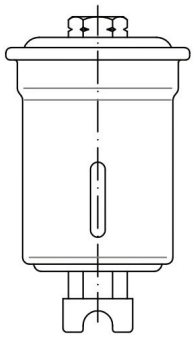 HT:121mm OD:56mm M12*1.25	JN6046 M14*1.5 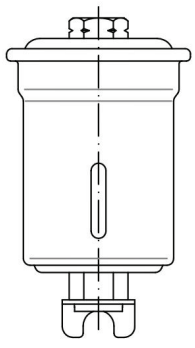 HT:121mm OD:56mm M12*1.25	JN6047 M12*1.25 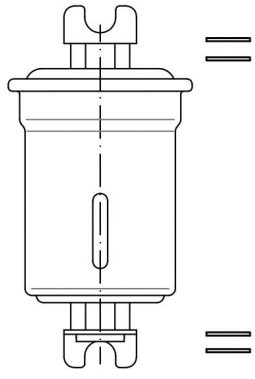 HT:131mm OD:56mm M12*1.25	JN6050 M14*1.5 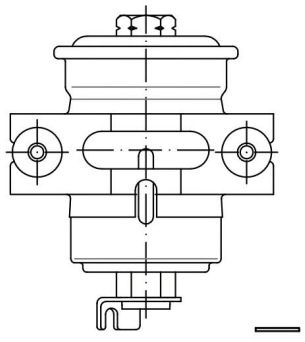 M12*1.25 HT:121mm OD:56mm
JN6051 M12*1.25 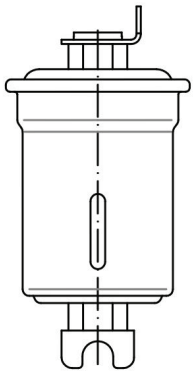 M12*1.25 HT:131mm OD:56mm	JN6053 M14*1.5 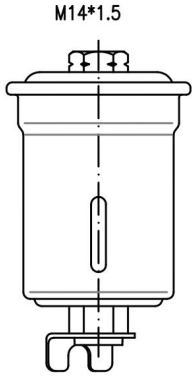 HT:121mm OD:56mm M12*1.25	JN6056 M12*1.25 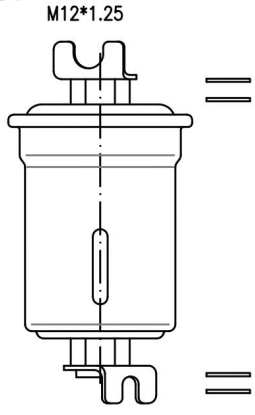 HT:131mm OD:56mm M12*1.25	JN6057 M12*1.25 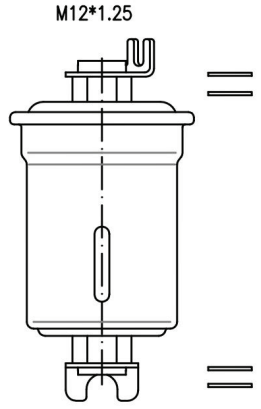 HT:131mm OD:56mm M12*1.25
JN6058 M12*1.25 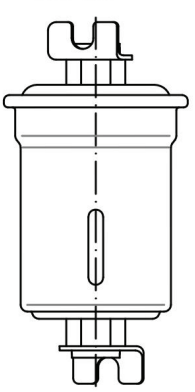 HT:131mm OD:56mm M12*1.25	JN6059 M14*1.5 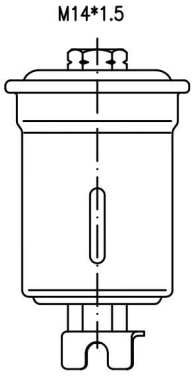 HT:121mm OD:56mm M12*1.25	JN6060 M14*1.5 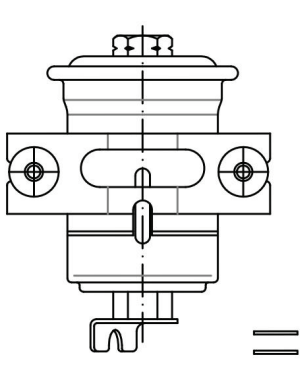 HT:121mm OD:56mm M12*1.25	JN6061 M14*1.5 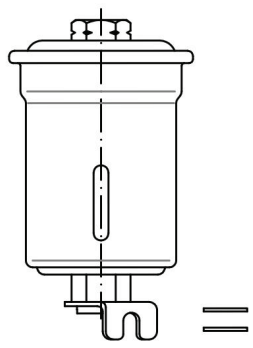 HT:121mm OD:56mm M12*1.25

JAPANESE MODELS

JETSHEEN

JN6062

JN6063

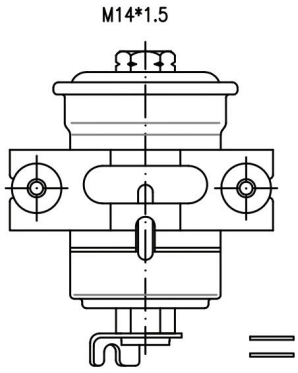

HT:121mm
OD:56mm

JN6064

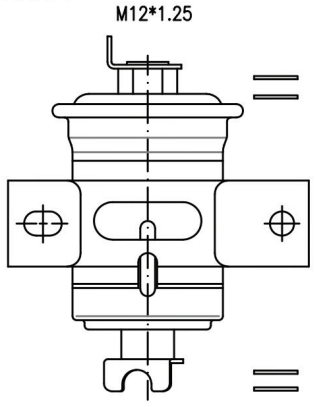

HT:131mm
OD:56mm

JN6065

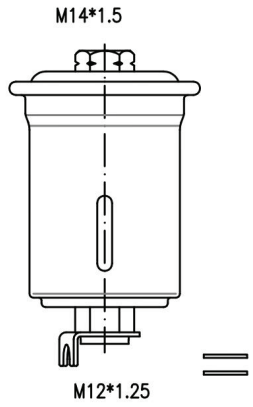

HT:121mm
OD:56mm

JN6200

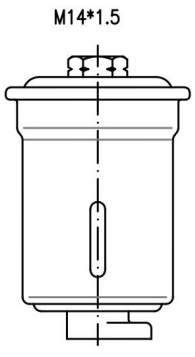

HT:109mm
OD:56mm

JN6201

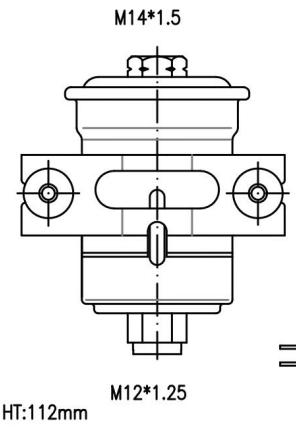

HT:112mm
OD:56mm

JN6202

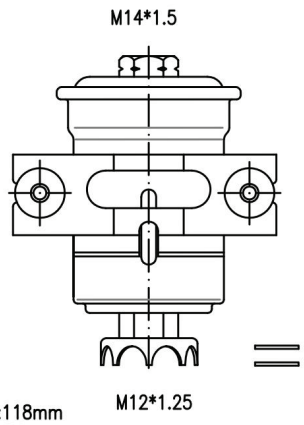

HT:118mm
OD:56mm

JN6203

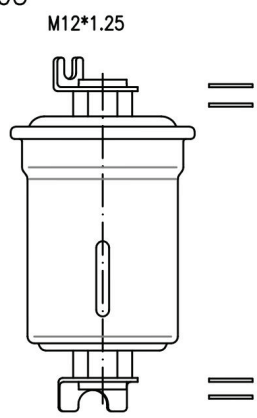

HT:131mm
OD:56mm

JN6204

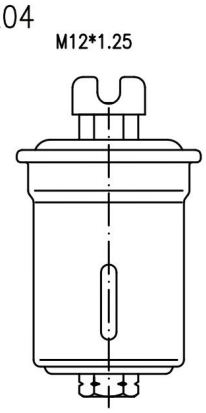

HT:121mm
OD:56mm

JN6205

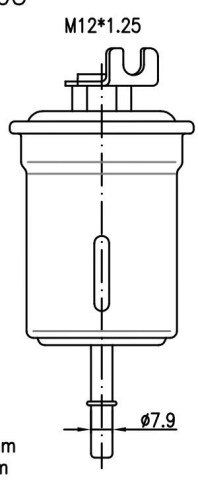

HT:152mm
OD:56mm

JN6206

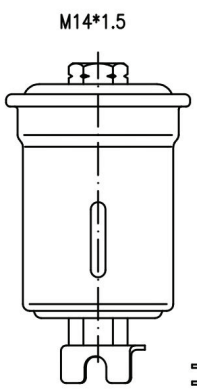

HT:121mm
OD:56mm

JN6208

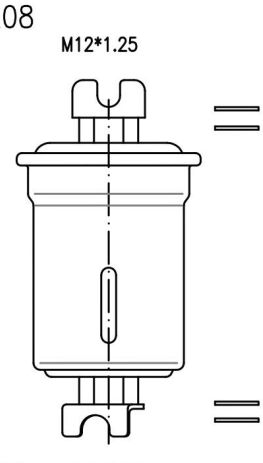

HT:131mm
OD:56mm

JN6209

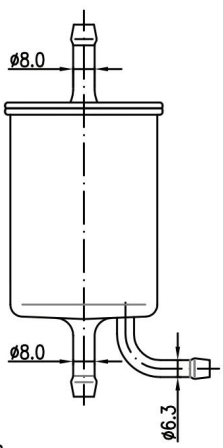

HT:138mm
OD:54.7mm

JAPANESE MODELS

JETSHEEN

JN7001

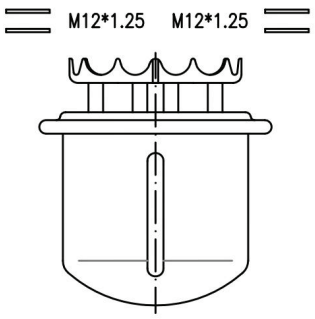

HT:93mm
OD:69mm

JN7002

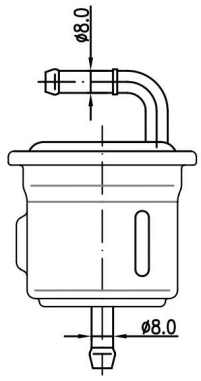

HT:109mm
OD:56mm

JN7003

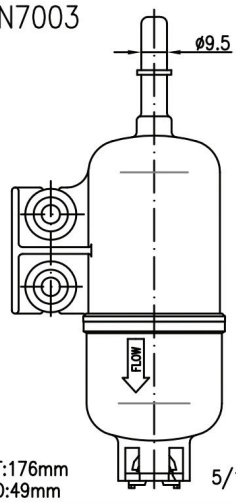

HT:176mm
OD:49mm

JN7004

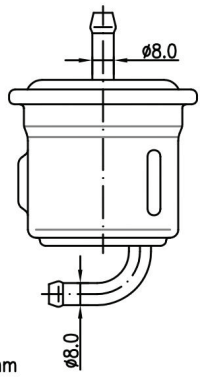

HT:110mm
OD:56mm

JN7005

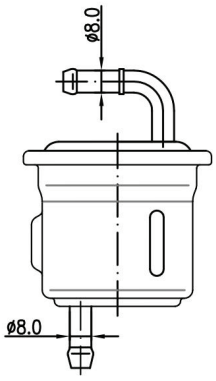

HT:109mm
OD:56mm

JN7006

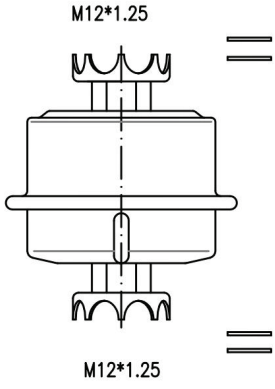

HT:99mm
OD:70mm

JN7007

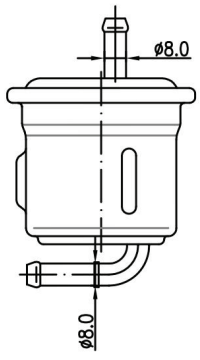

OD:56mm

JN7008

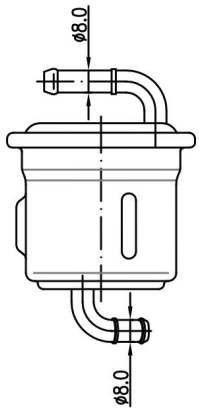

OD:56mm

JN7009

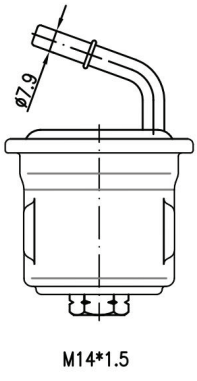

HT:110mm
OD:56mm

JN7010

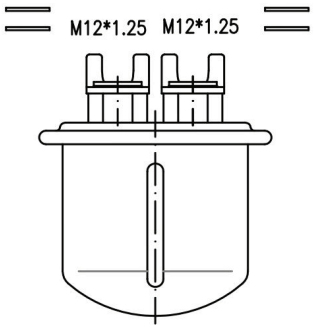

HT:94mm
OD:69mm

JN7015

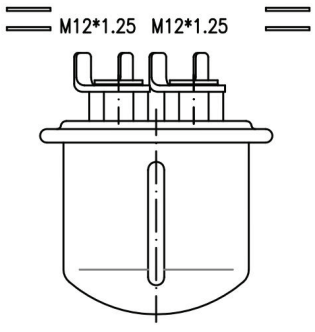

HT:94mm
OD:69mm

JN7020

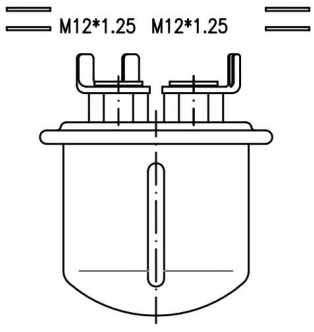

HT:94mm
OD:69mm

JN7025

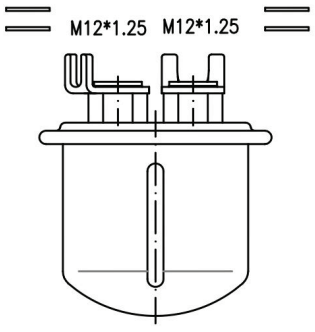

HT:94mm
OD:69mm

JN7030

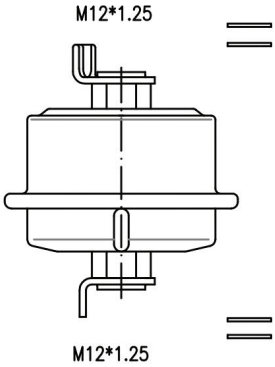

HT:102mm
OD:70mm

JN7035

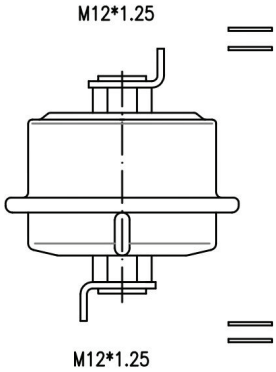

HT:102mm
OD:70mm

JN7040

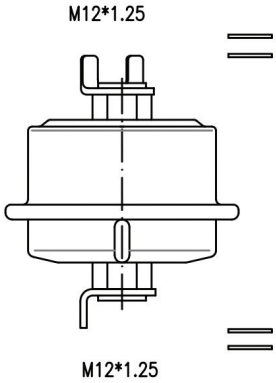

HT:102mm
OD:70mm

JAPANESE MODELS

JETSHEEN

JN7050

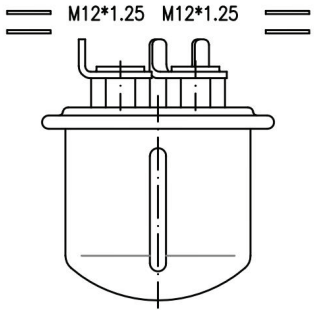

HT:94mm
OD:69mm

JN7060

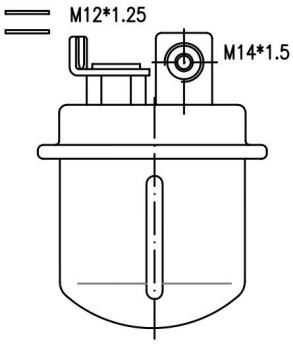

HT:108mm
OD:69mm

JN7061

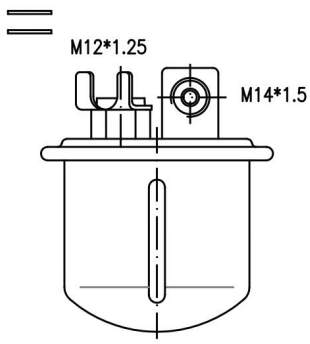

HT:94mm
OD:69mm

JN7062

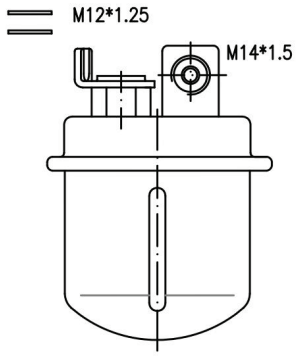

HT:108mm
OD:69mm

JN7063

JN7064

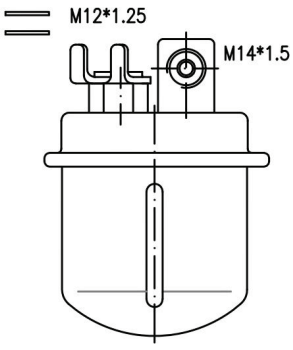

HT:108mm
OD:69mm

JN7065

JN7066

JN7067

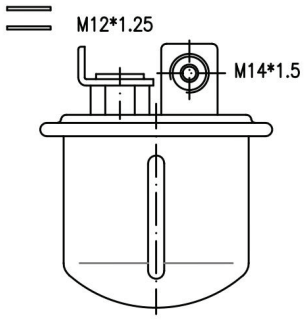

HT:94mm
OD:69mm

JN7070

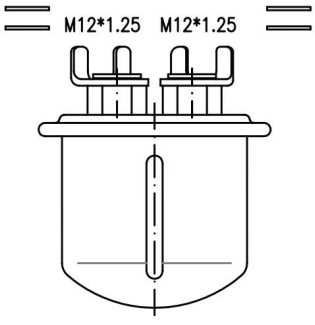

HT:94mm
OD:69mm

JN7075

JN7080

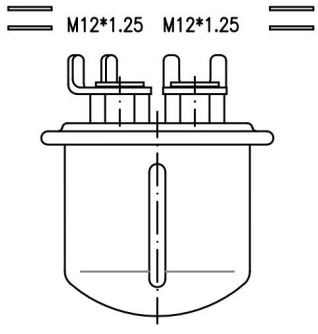

HT:94mm
OD:69mm

JN7085

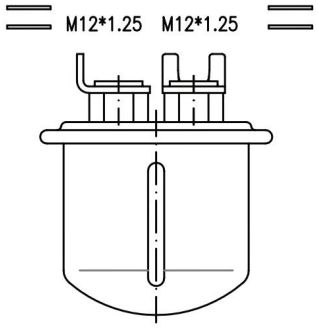

HT:94mm
OD:69mm

JN7086

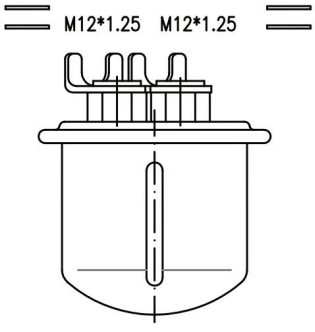

HT:94mm
OD:69mm

JN7090

JN7095

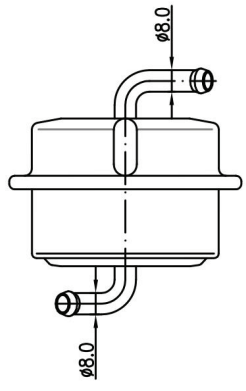

HT:104mm
OD:70mm

JAPANESE MODELS

JETSHEEN

JN7200 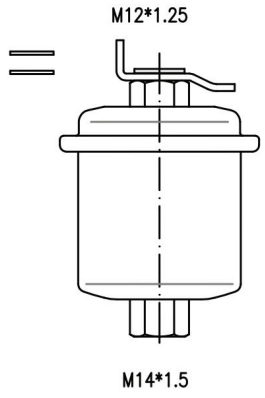 HT:110mm OD:60.5mm	JN7201 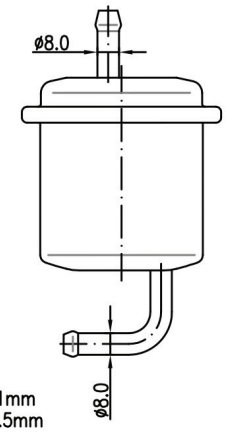 HT:131mm OD:60.5mm	JN7202 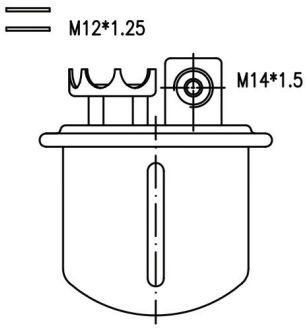 HT:94mm OD:69mm	JN7295 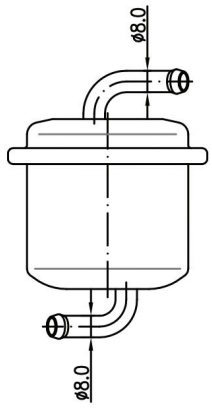 HT:111mm OD:60.5mm
JN7296 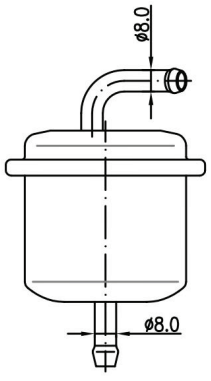 HT:111mm OD:60.5mm	JN7297 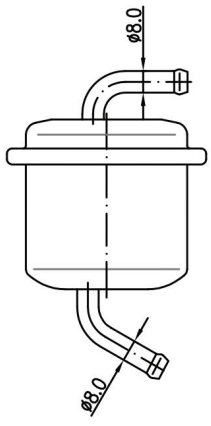 OD:60.5mm		

JAPANESE MODELS

JETSHEEN

JN9038 M12*1.25 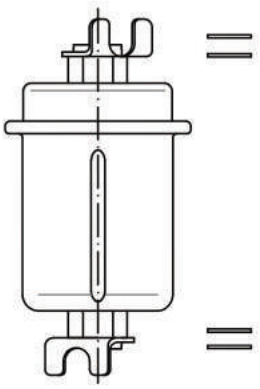 HT:126mm OD:56mm M12*1.25	JN9039 M12*1.25 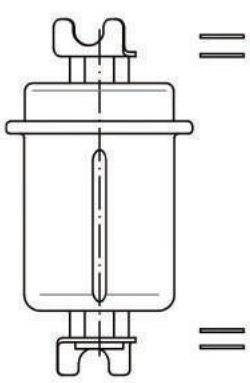 HT:126mm OD:56mm M12*1.25	JN9040 M12*1.25 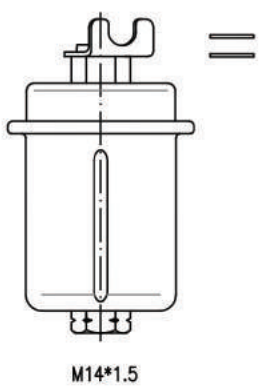 M14*1.5 HT:120mm OD:56mm	JN9041
JN9042 M12*1.25 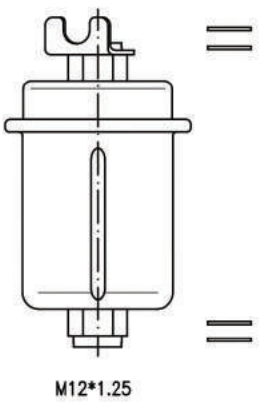 M12*1.25 OD:56mm	JN9043 M12*1.25 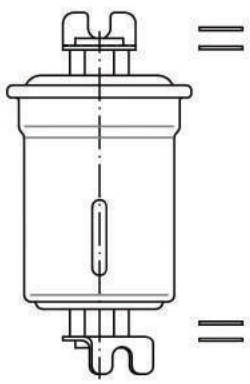 HT:131mm OD:56mm M12*1.25	JN9044 M12*1.25 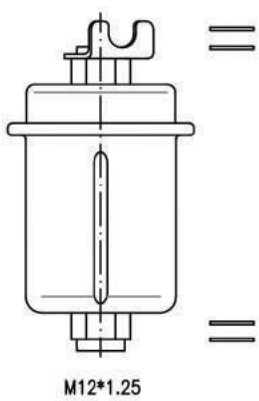 M12*1.25 OD:56mm	JN9045 ø8.0 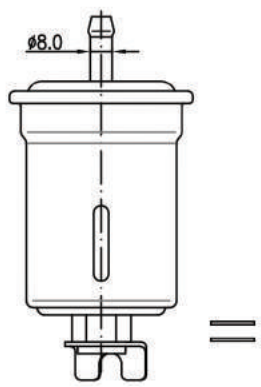 M12*1.25 OD:56mm
JN9046 ø8.0 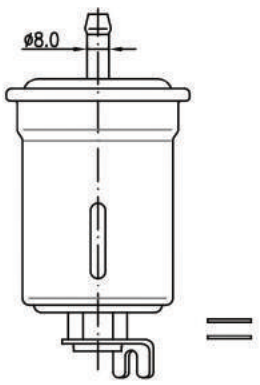 HT:136mm OD:56mm M12*1.25	JN9047 ø8.0 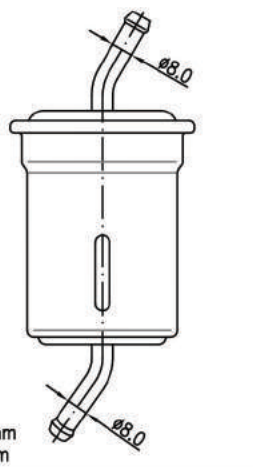 ø8.0 HT:169mm OD:56mm	JN9048 M12*1.25 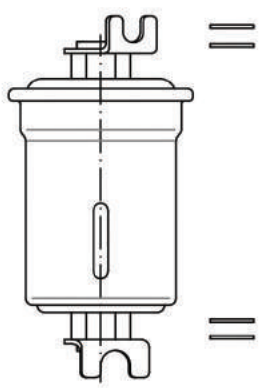 HT:131mm OD:56mm M12*1.25	JN9049 M12*1.25 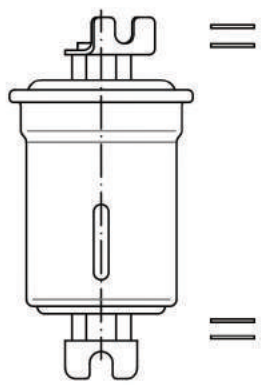 HT:131mm OD:56mm M12*1.25
JN9050 M12*1.25 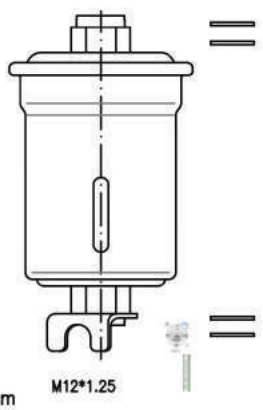 HT:123mm OD:56mm M12*1.25	JN9051 M12*1.25 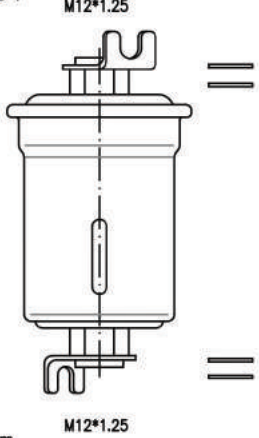 HT:131mm OD:56mm M12*1.25	JN9052 ø8.0 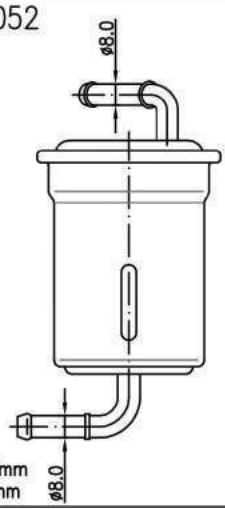 HT:133mm OD:56mm ø8.0	JN9053 ø8.0 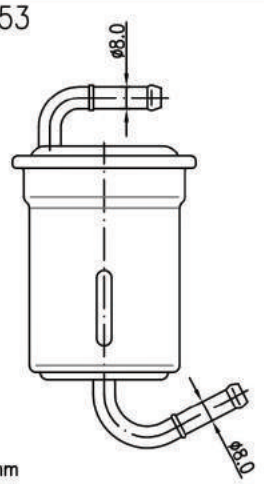 ø8.0 HT:137mm OD:56mm

JAPANESE MODELS

JETSHEEN

JN9054

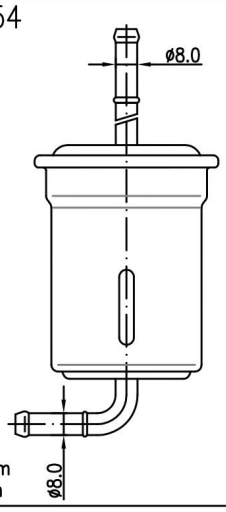

HT:175mm
OD:56mm

JN9055

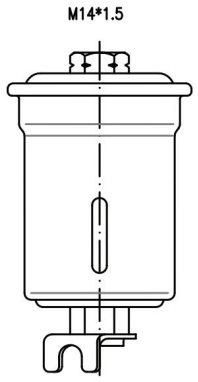

HT:121mm
OD:56mm
M12*1.25

JN9056

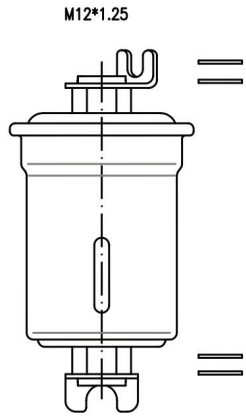

HT:131mm
OD:56mm
M12*1.25

JN9057

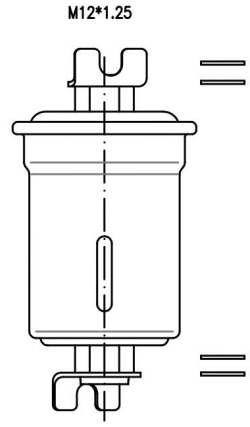

HT:131mm
OD:56mm
M12*1.25

JN9058

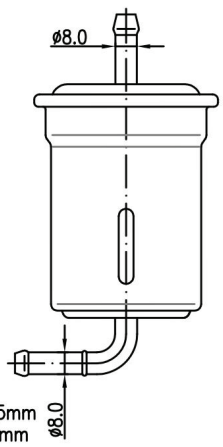

HT:135mm
OD:56mm

JN9059

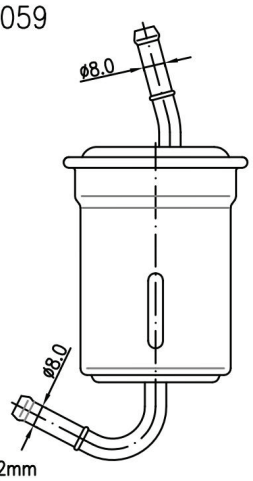

HT:162mm
OD:56mm

JN9060

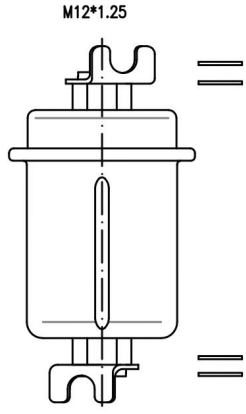

HT:126mm
OD:56mm
M12*1.25

JN9061

JN9062

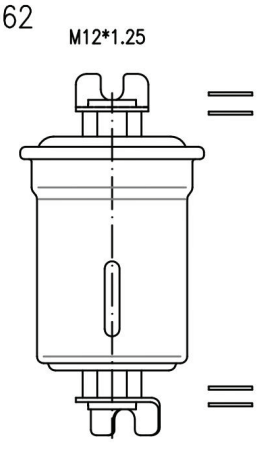

HT:131mm
OD:56mm
M12*1.25

JN9063

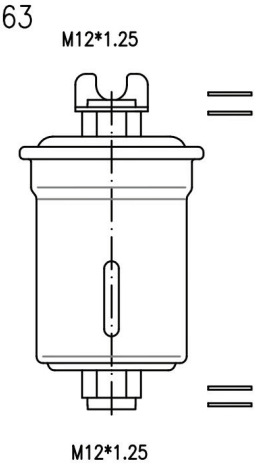

OD:56mm

JN9064

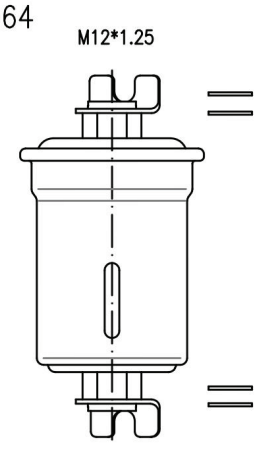

HT:131mm
OD:56mm
M12*1.25

JN9065

JN9066

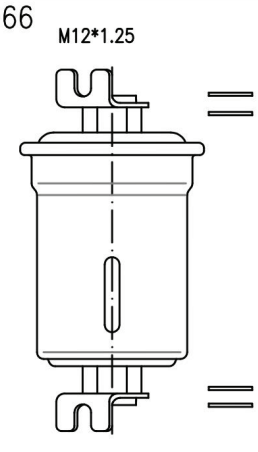

HT:131mm
OD:56mm
M12*1.25

JN9067

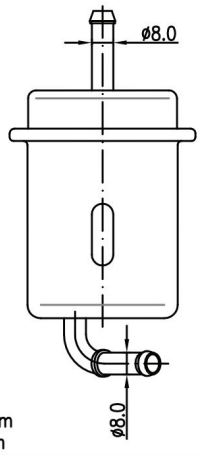

HT:137mm
OD:56mm

JN9068

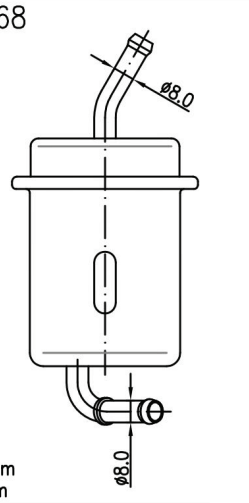

HT:143mm
OD:56mm

JN9069

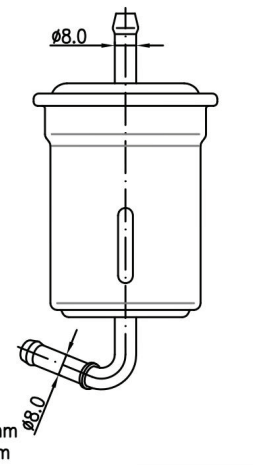

HT:137mm
OD:56mm

JAPANESE MODELS

JETSHEEN

JN9070 M12*1.25 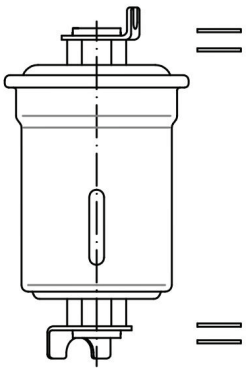 HT:131mm M12*1.25 OD:56mm	JN9071 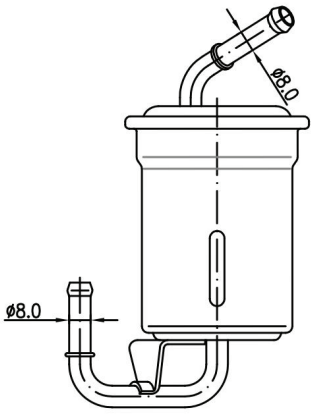 HT:150mm OD:56mm	JN9072 M12*1.25 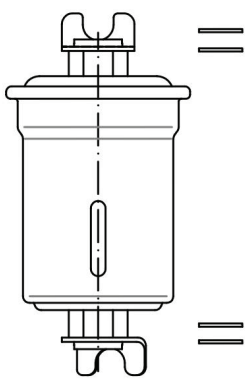 HT:131mm M12*1.25 OD:56mm	JN9073 M12*1.25 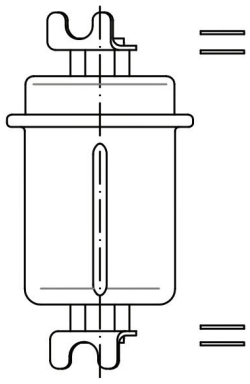 HT:126mm M12*1.25 OD:56mm
JN9074 M12*1.25 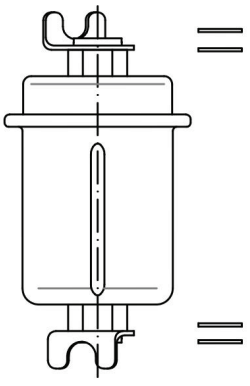 HT:126mm M12*1.25 OD:56mm	JN9075 M12*1.25 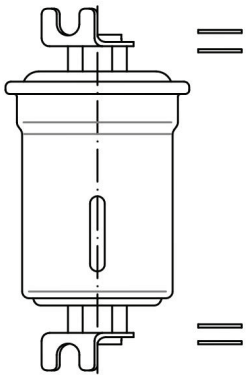 HT:131mm M12*1.25 OD:56mm	JN9076 M14*1.5 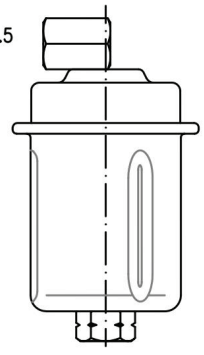 HT:120mm OD:56mm	JN9077 M12*1.25 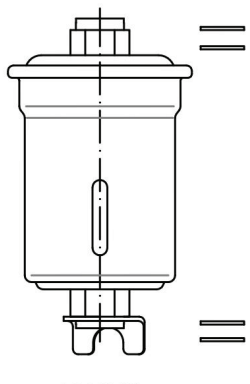 M12*1.25 OD:56mm
JN9078 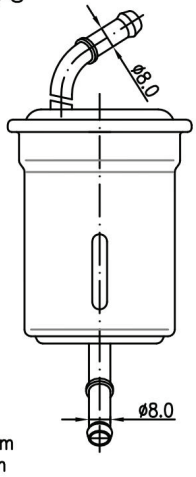 HT:180mm OD:56mm	JN9079 M12*1.25 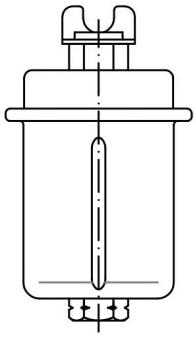 M14*1.5 HT:108mm OD:56mm	JN9080 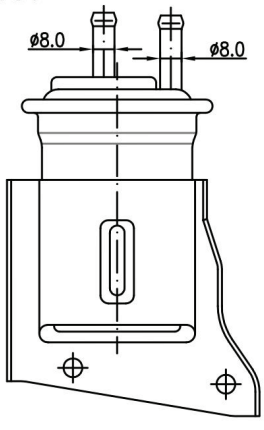 OD:56mm	JN9081 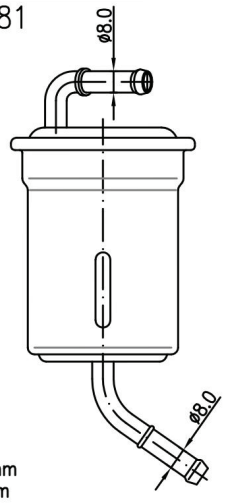 HT:155mm OD:56mm
JN9082 M12*1.25 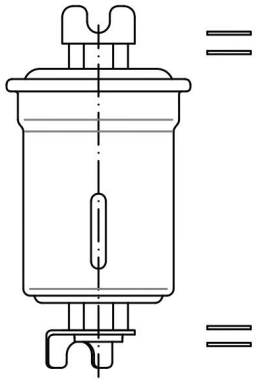 HT:131mm M12*1.25 OD:56mm	JN9083 M14*1.5 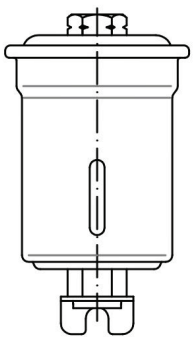 HT:121mm M12*1.25 OD:56mm	JN9084 M12*1.25 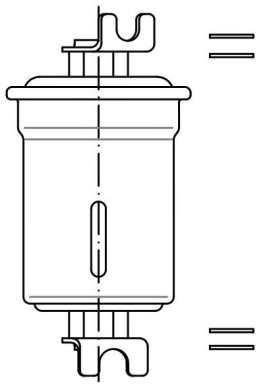 HT:131mm M12*1.25 OD:56mm	JN9085 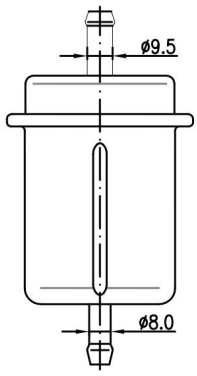 HT:133mm OD:56mm

JAPANESE MODELS

JETSHEEN

JN9086 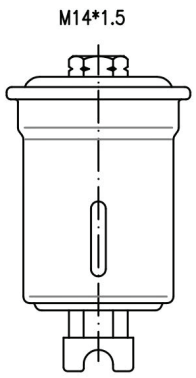 HT:121mm M12*1.25 OD:56mm	JN9087 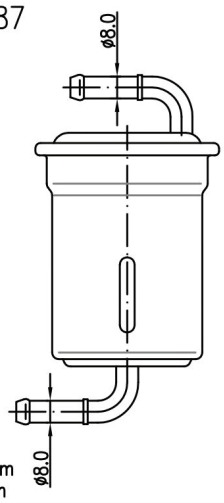 HT:131mm OD:56mm	JN9088 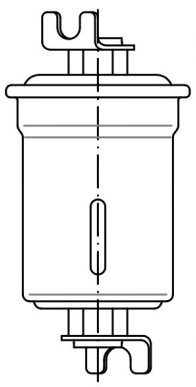 HT:131mm M12*1.25 OD:56mm	JN9089 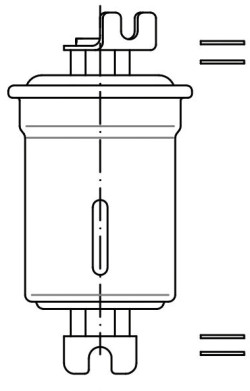 HT:131mm OD:56mm
JN9090 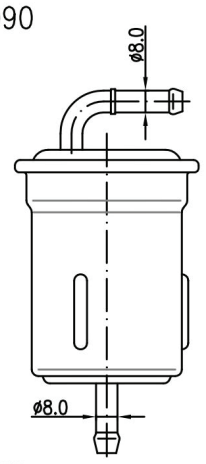 HT:136mm OD:56mm	JN9091 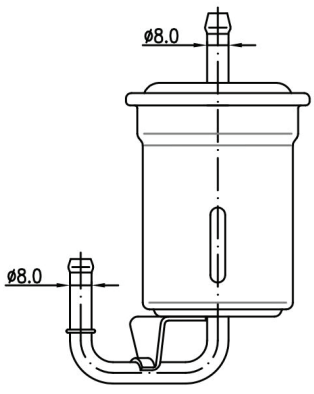 HT:138mm OD:56mm	JN9092 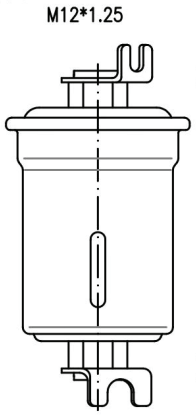 HT:131mm M12*1.25 OD:56mm	JN9093 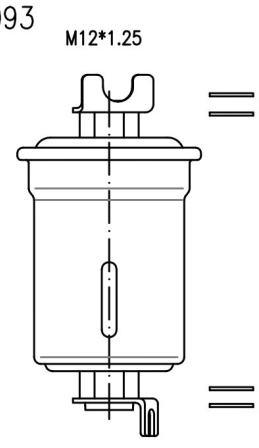 HT:131mm M12*1.25 OD:56mm
JN9094 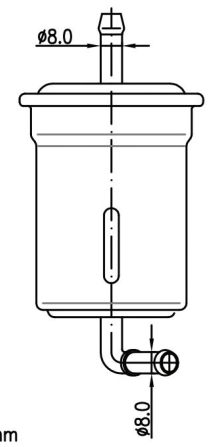 OD:56mm	JN9096 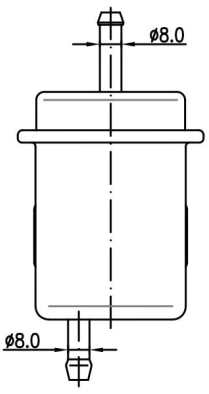 HT:145mm OD:56mm	JN9097 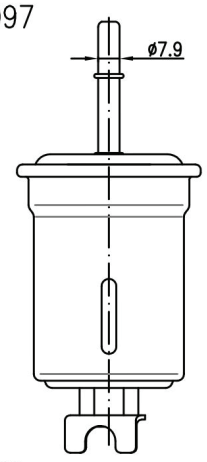 HT:156mm M12*1.25 OD:56mm	JN9098 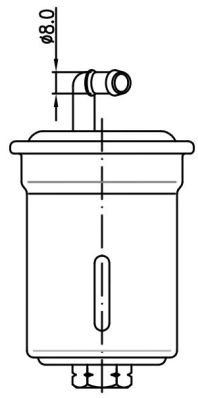 HT:121mm M14*1.5 OD:56mm
JN9099	JN9100 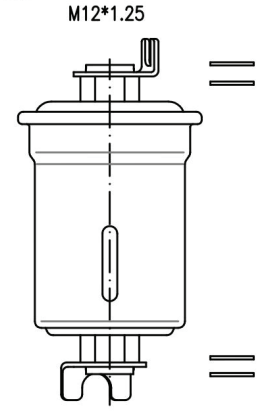 HT:131mm M12*1.25 OD:56mm	JN9102 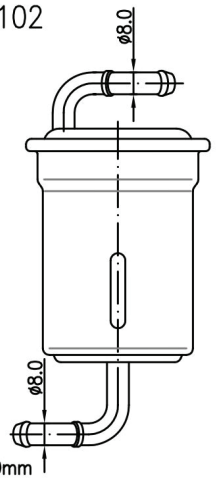 HT:140mm OD:56mm	JN9104 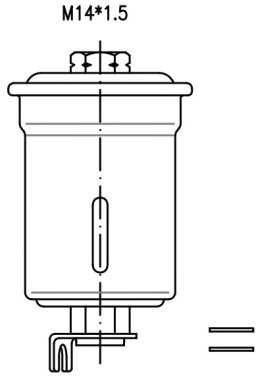 HT:121mm M12*1.25 OD:56mm

JETSHEEN®

JN9105	JN9106	JN9107	JN9108
JN9109 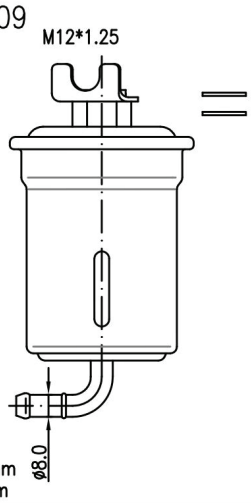 HT:131mm OD:56mm	JN9110	JN9114 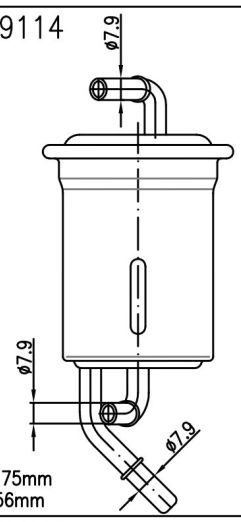 HT:175mm OD:56mm	JN9117 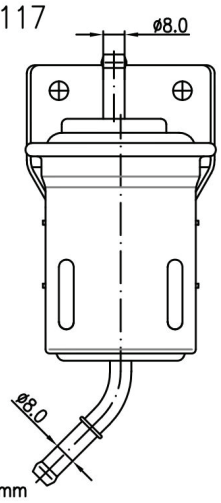 OD:56mm
JN9118 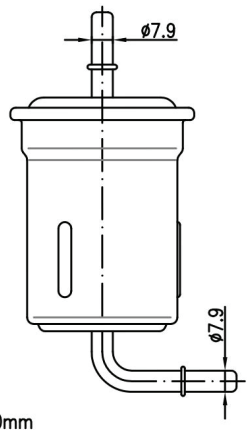 HT:140mm OD:56mm	JN9119 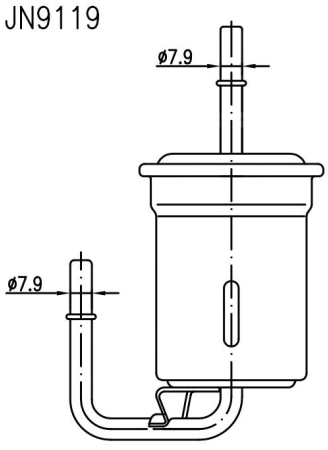 HT:154mm OD:55.4mm	JN9120 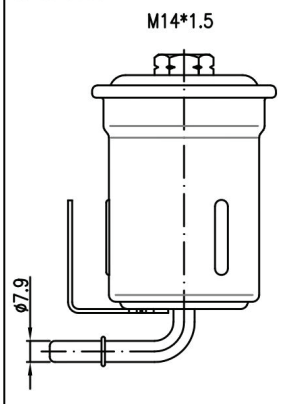 HT:122mm OD:56mm	JN9201 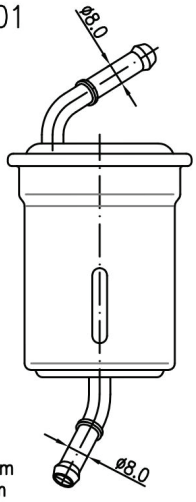 HT:180mm OD:56mm
JN9202 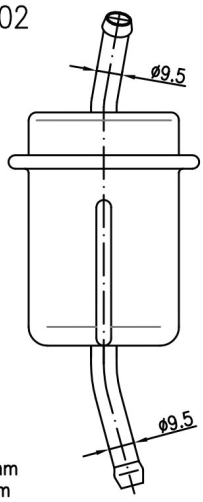 HT:182mm OD:56mm	JN9203 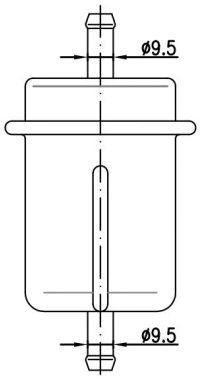 HT:137mm OD:56mm	JN9204 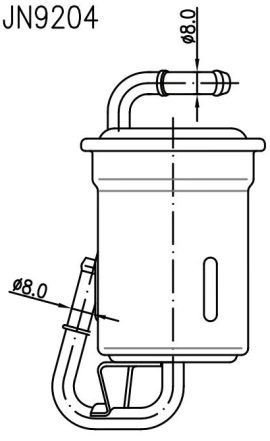 OD:56mm	JN9205 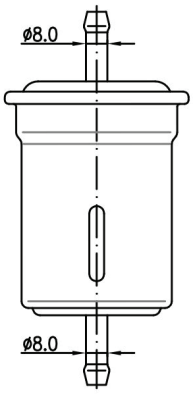 HT:136mm OD:56mm

JAPANESE MODELS

JETSHEEN

JN9206

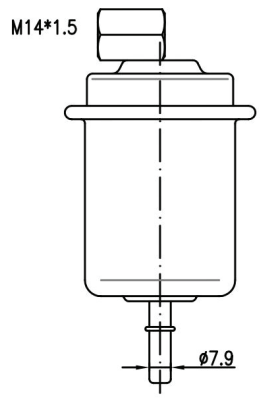

HT:137mm
OD:56mm

JN9207

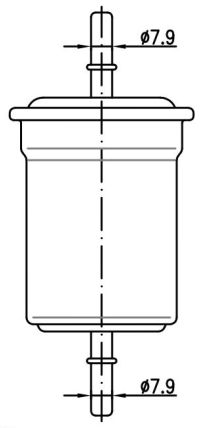

HT:150mm
OD:56mm

JN9208

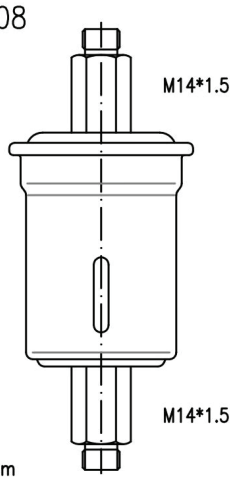

HT:165mm
OD:56mm

JN9209

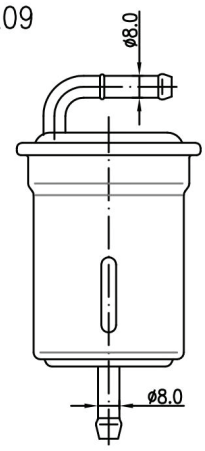

OD:56mm

JN9210

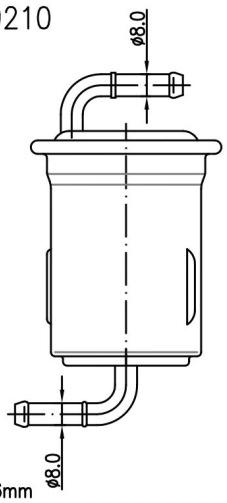

OD:56mm

JN9211

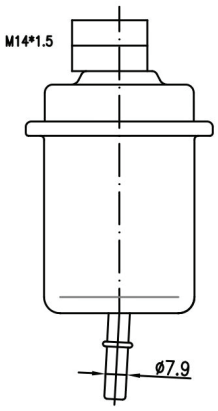

HT:137mm
OD:56mm

JN9212

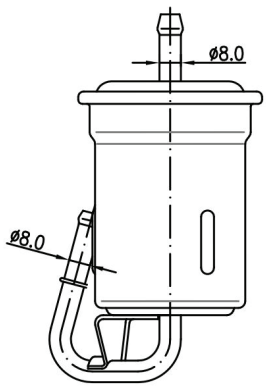

OD:56mm

JN9213

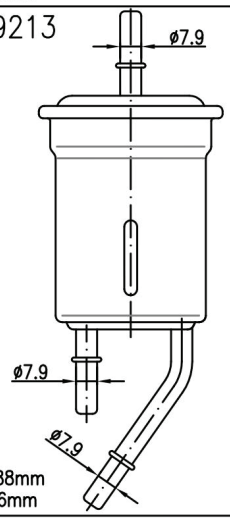

HT:188mm
OD:56mm

JN9214

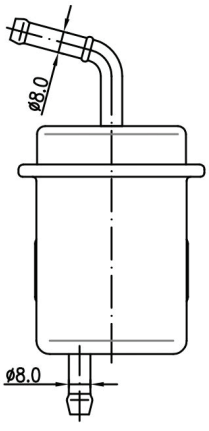

OD:56mm

JN9215

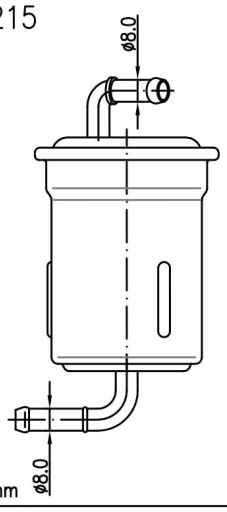

OD:56mm

JN9216

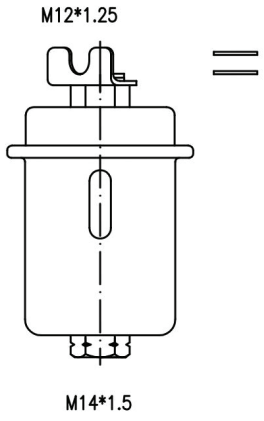

OD:56mm

JN9217

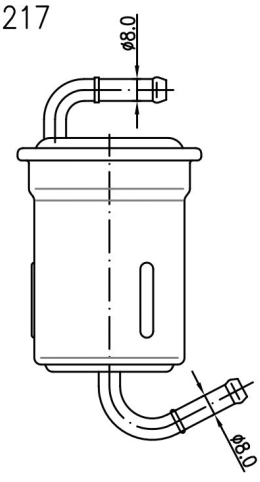

OD:56mm

JN9218

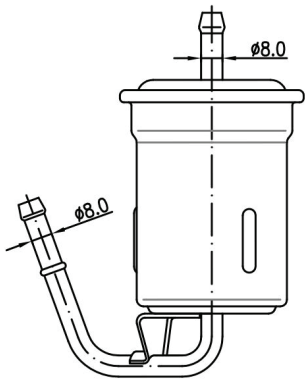

OD:56mm

JN9219

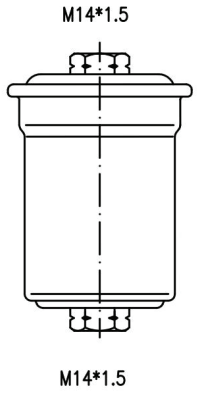

HT:110mm
OD:56mm

JN9220

JN9221

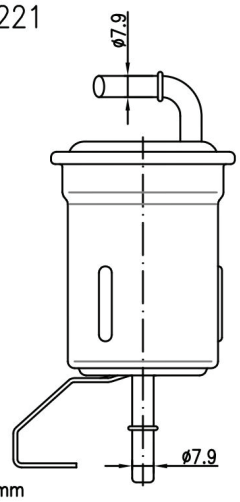

OD:56mm

JN9222 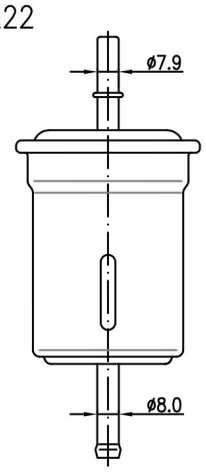 OD:56mm	JN9223 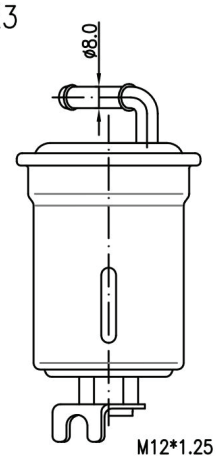 OD:56mm	JN9644 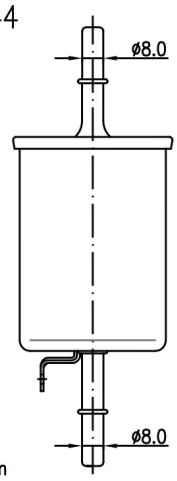 HT:161mm OD:56mm	

JETSHEEN

JI2500(ZL05-20-490A)

HT:139mm
OD:98mm

JI2501(GY01-13-ZE0)

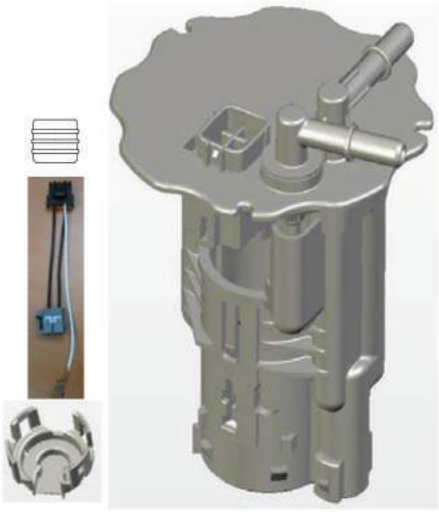

HT:121mm
OD:163mm

JI2502(PE1A-13-ZE0)

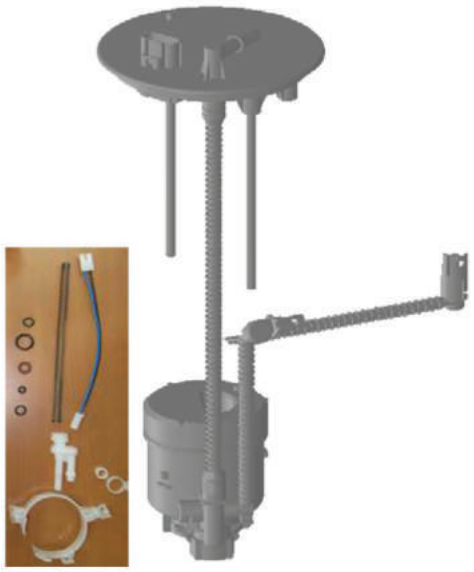

JI2503(L577-13-ZE0)

JI2504(LF17-13-35ZA/ZB/ZC/ZD)

JETSHEEN

JI3300(16400-4M405)

16400-4M500

16400-4M501

HT:133mm

OD:86mm

JI3301(16400-2Y505)

HT:133mm

OD:86mm

JI3302(16400-2Y921)

HT:131mm

OD:86mm

JI3303A(52750-VB0100)

HT:153mm

OD:91mm

JI3304(17040-9Y00A)

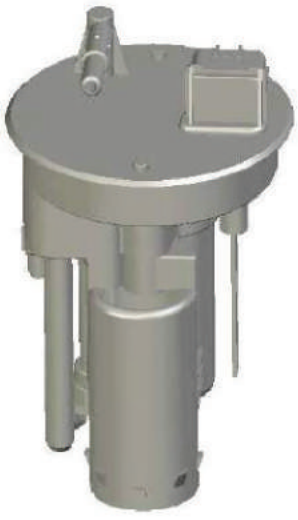

HT:175mm

OD:122mm

JI3305(17040-ED80A)

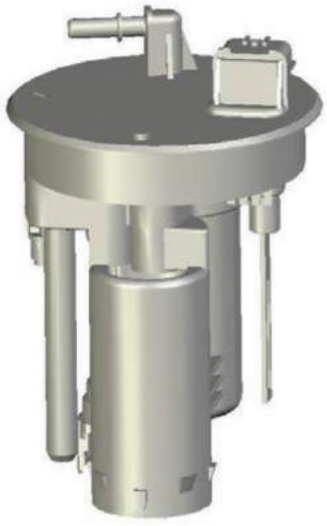

HT:190mm

OD:122mm

JETSHEEN

JI4100(92193770) 		

JAPANESE MODELS

JETSHEEN

JI6300(23300-21010)
(23300-0A020)

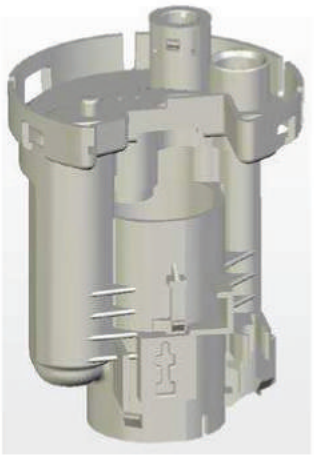

HT:138mm
OD:96mm

JI6301(23300-23030/40)

HT:143mm
OD:96mm

JI6302(23300-28030/40)

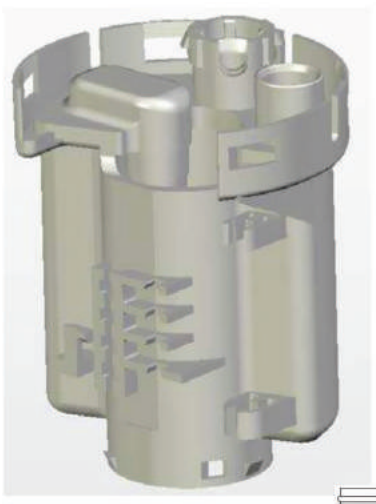

HT:145mm
OD:98mm

JI6303(23300-21030)

HT:85mm
OD:75mm

JI6304(23300-74330)
(23300-0D010)

HT:126mm
OD:82mm

JI6305(77024-33060)
(77024-06090)
(77024-06110)

JI6306A(77024-12050)

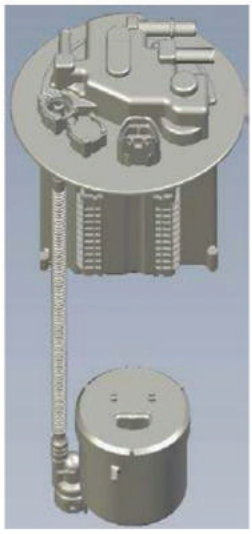

JI6306AR

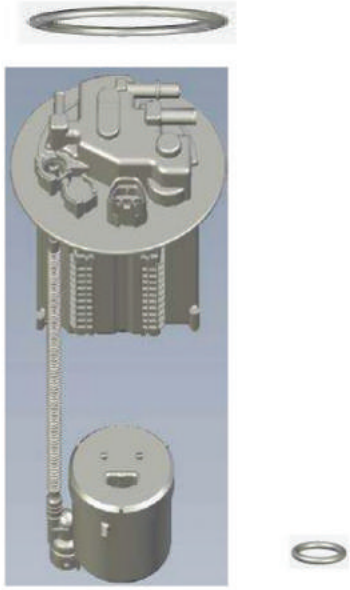

JI6306(77024-12050)

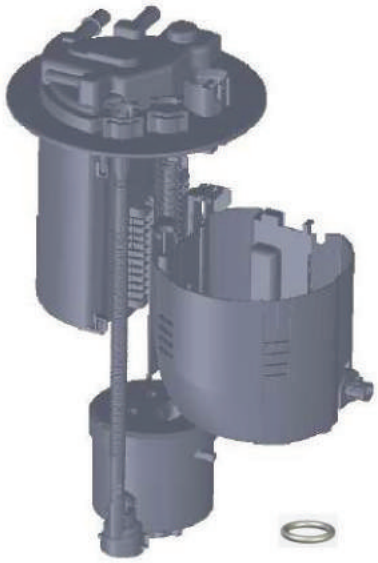

JETSHEEN

JI6306R

JI6307V(23300-20130)

HT:120mm
OD:117mm

JI6308(23300-31140)

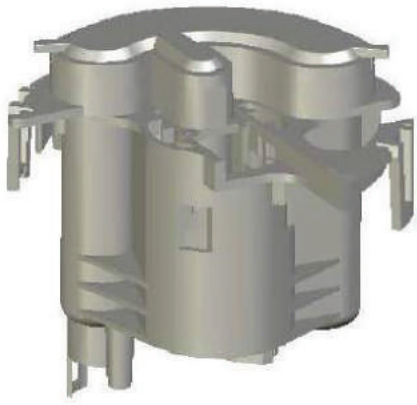

HT:117mm
OD:116mm

JI6309(77024-42061)

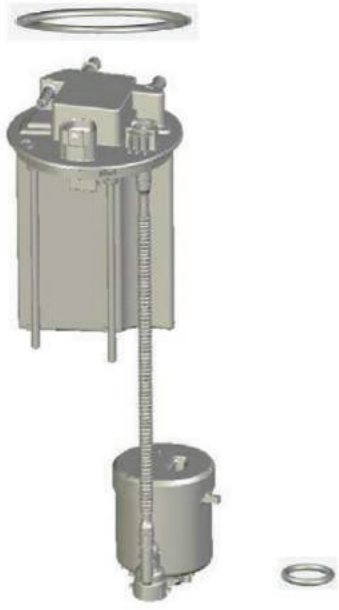

JI6310(77024-52122)(77024-52121)

JI6310R

JI6311(77024-0D060、61、62)

JI6312(77024-8Y002)

JI6313(77024-42080)

77024-42110
77704-42080

JETSHEEN

JI6314A(77024-28021)

JI6314(77024-28021)

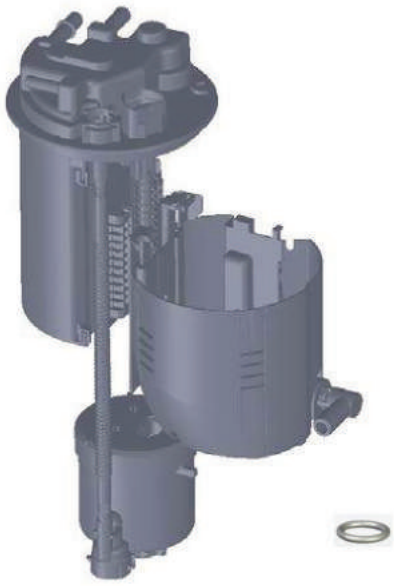

JI6315(77024-52171)

JI6315R

JI6315P

JI6316A(77024-02132)

JI6316(77024-02132)

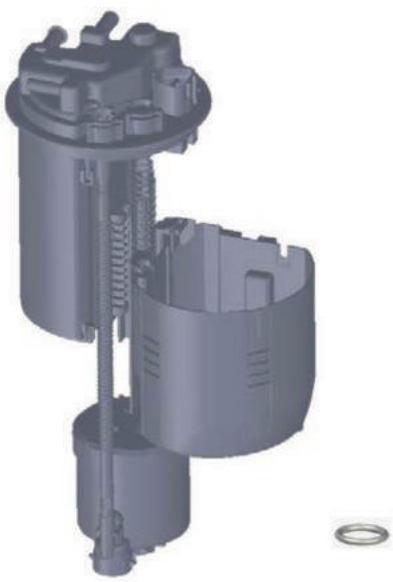

JI6317(23300-50120)
(92146684)

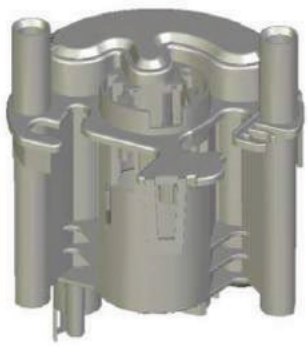

HT:132mm
OD:116mm

JI6318(77024-12040)
77024-47100 77020-47092
77704-47040

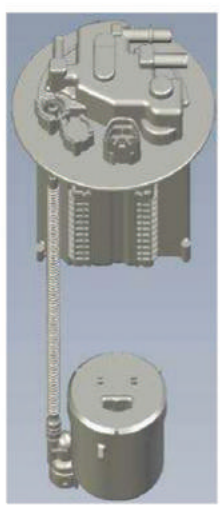

JETSHEEN

JI6318R 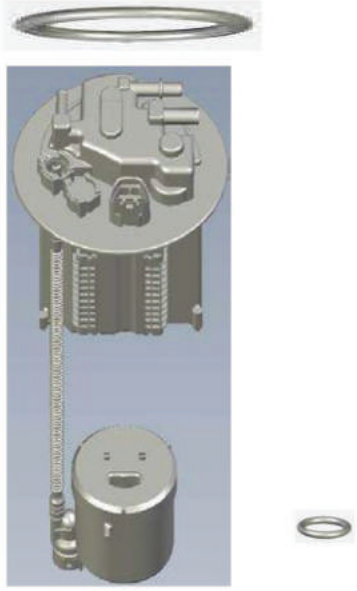	JI6319(77024-28060)	JI6320
JI6321(77024-48040)	JI6322(77024-06200)	JI6323(77024-48050)

JETSHEEN

JI6303H

ASN 275 – 7(275mm)

ABO6303(有凸點，缺口二小)

77024-02120　77024-26010
77024-52122　77024-28021

JI6309H

AS350 – 7(350mm)

ABO6303(有凸點，缺口二小)

77024-42061

JI6311H

ASN 275 – 7(275mm)

ABO6311(有凸點，缺口一大一小)

77024-0D060
77024-0D061　77024-0D062

JI6313H

AS350 – 7(350mm)

ABO6313(有凸點，沒有缺口)

77024-42080

JI6315H

ASN 275 – 7(275mm)

ABO6313(有凸點，沒有缺口)

77024-52171

JI6316H

ASN 275 – 7(275mm)

ABO6305(沒有凸點，缺口一大一小)

77024-02132

JI6310C

JETSHEEN

JI6400(42072AG140) 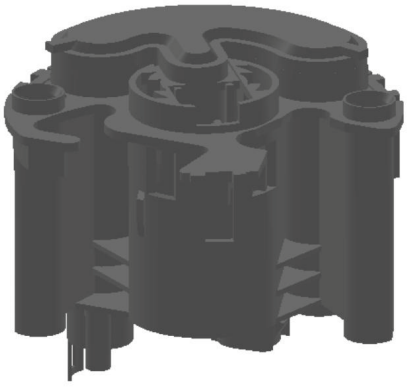 HT:120mm OD:117mm		

JAPANESE MODELS

JETSHEEN

JI6500(MR526974) 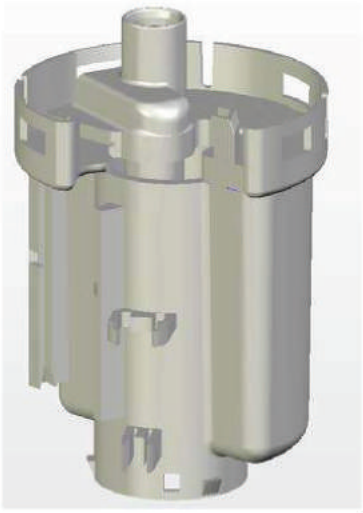 HT:153mm OD:97mm	JI6501(MR431453) 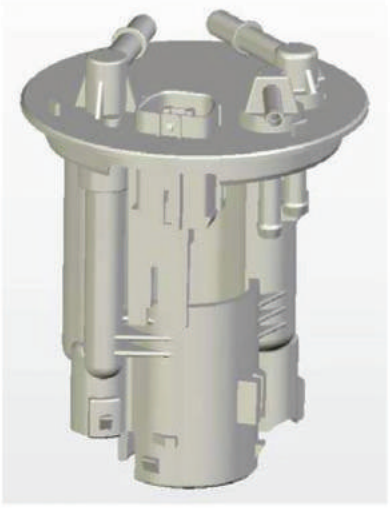 HT:165mm OD:120mm	JI6502(MR552781) 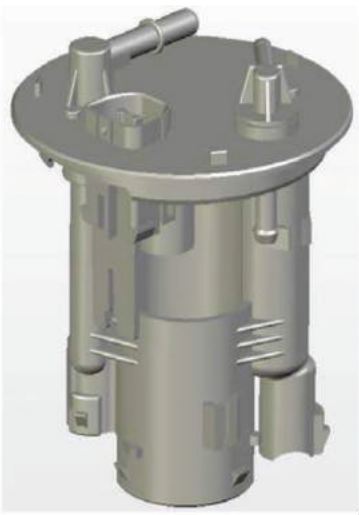 HT:165mm OD:120mm
JI6503(MR450543) 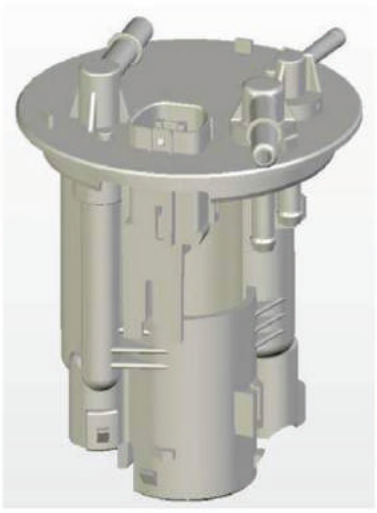 HT:165mm OD:120mm	JI6504(MR431096) 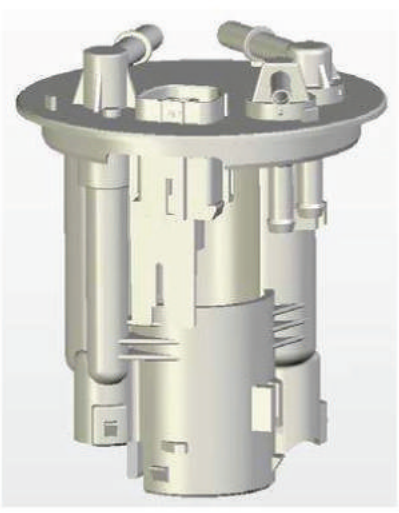 HT:165mm OD:120mm	JI6505(MR450542) 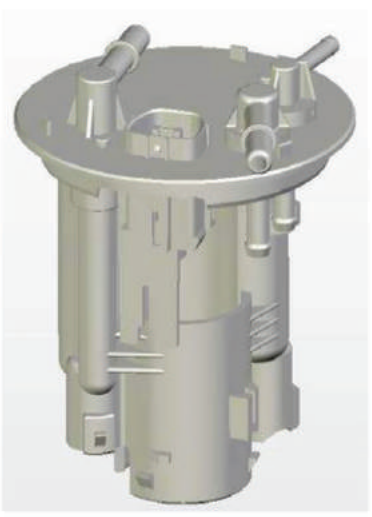 HT:165mm OD:120mm
JI6506(MR906933) 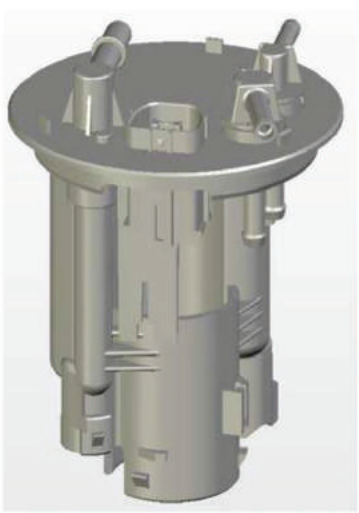 HT:165mm OD:120mm	JI6507(MR514676) 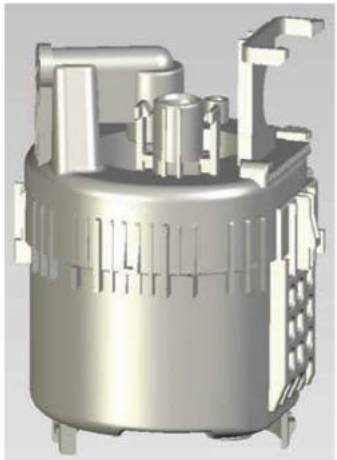 HT:131mm OD:100mm	JI6508(MR529135) HT:152mm OD:97mm

JETSHEEN

JI6509(1770A046)

JI6510(1770A106)
(CW658316)

JI6510-1(Z924)

JI6511(1770A118)

JI6512(1770A044)

JI6513(MR571545)

JETSHEEN

JI7300(16010-SDC-E01)
(16010-SDG-H00)

HT:162mm
OD:106mm

JI7301(16010-S84-A01)

HT:220mm
OD:106mm

JI7302(16010-S3N-000)

HT:154mm
OD:106mm

JI7303(16010-S5A-932)

HT:194mm
OD:121mm

JI7304A(16010-SAA-000)

HT:125mm
OD:108mm

JI7304B(17048-S9A-000)
(17048-TG0-000)

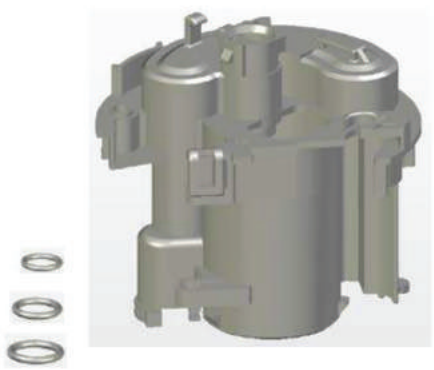

HT:125mm
OD:108mm

JI7304S(17048-TF0-000)

HT:125mm
OD:108mm

JI7305A(17048-SWE-T00)
(17048-SWE-000)
(17048-STX-A00)
(17048-SWA-A00)

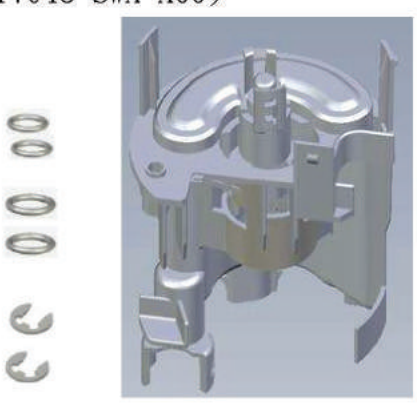

HT:152mm
OD:105mm

JI7306(17048-SNA-000)

JETSHEEN

JI7306A(17048-SNA-000) (17048-SNA-A01) (17048-SNA-010) 	JI7307A(17048-TA0-000) (17048-TA0-A00) 	JI7307B(17048-TA0-000)
JI7307C 	JI7308A(17048-T0A-000) 	

JAPANESE MODELS

JETSHEEN

JI9300(31911-2D000)
(31910-2D000)

HT:140mm
OD:82mm

JI9301(31911-2E000)

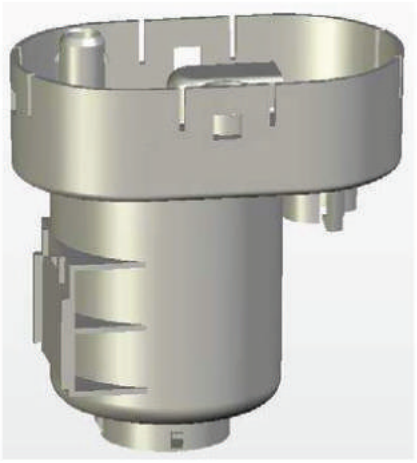

HT:143mm
OD:139mm

JI9302(31112-1C000)

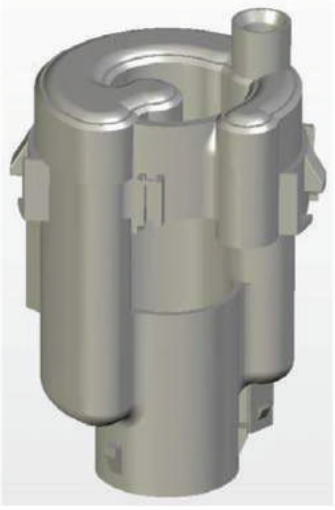

HT:140mm
OD:81mm

JI9302S(31112-1C000)

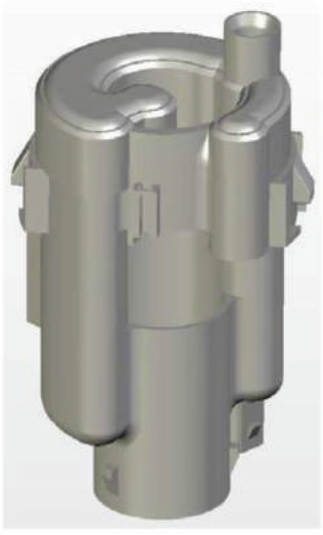

HT:140mm
OD:81mm

JI9303(31112-17000)(有孔)

HT:140mm
OD:81mm

JI9304(31112-26000)(無孔)

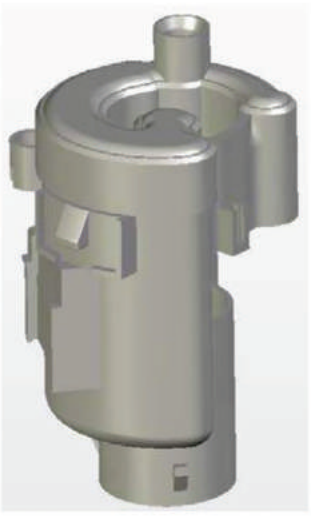

HT:140mm
OD:81mm

JI9305(31911-09000)(有孔)

HT:153mm
OD:82mm

JI9306(31911-09100)(無孔)

HT:153mm
OD:82mm

JI9307(31112-1G000)

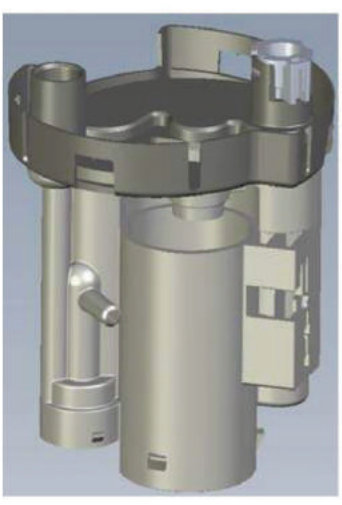

HT:137mm
OD:105mm

JETSHEEN

JI9308V(31910-2H000)

HT:128mm
OD:81mm

JI9309(31112-07000)

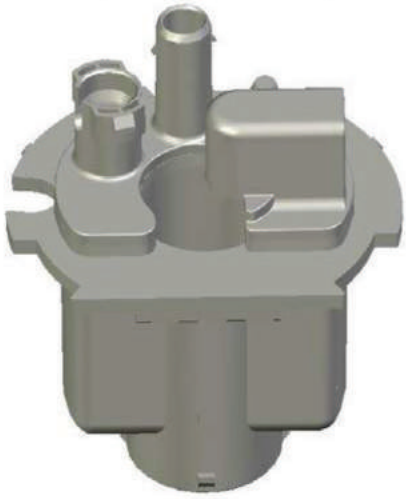

HT:131mm
OD:113mm

JI9310(31112-1CA00)
31112-1C000 31112-1C100

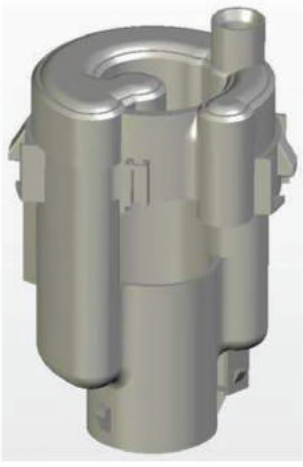

HT:140mm
OD:81mm

JI9311(31911-3K600)

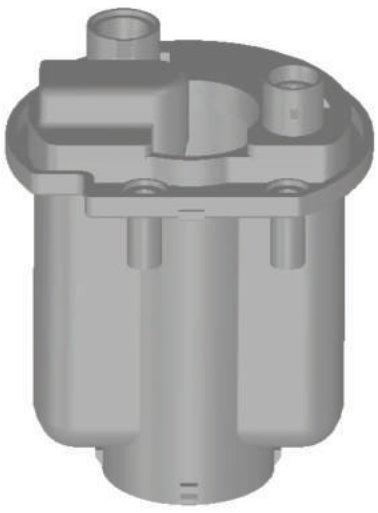

JI9312(31112-25700)

JI9313(31112-3R000)(Z910)

JI9314(31112-3Q500)

JETSHEEN

JI9500(OK52Y-20-490)

HT:120mm
OD:81mm

JI9501(31911-3E200)

HT:134mm
OD:81mm

JI9502(31911-38204)

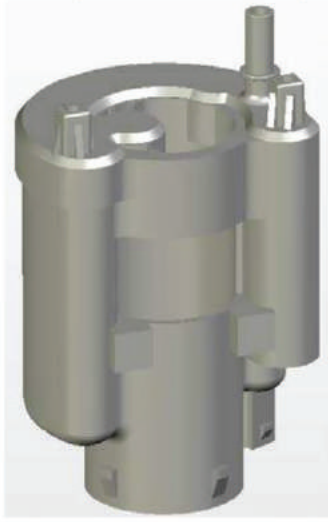

HT:151mm
OD:81mm

JI9503(31911-4D600)

HT:128mm
OD:82mm

JI9504(31112-2P000)

JETSHEEN®

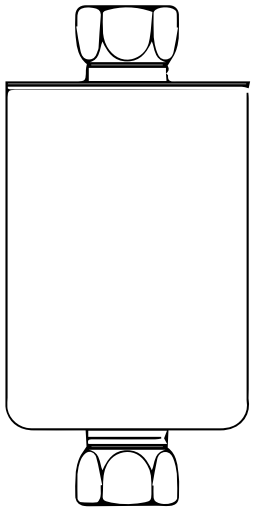

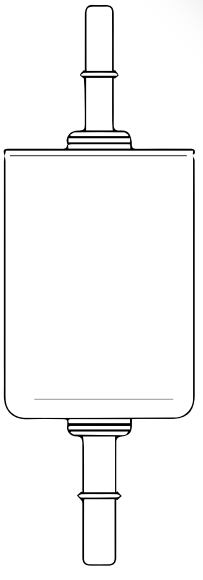

JETSHEEN ENTERPRISE CO., LTD.

NO.2-95 MA KOU LI, MADOU DIST., TAINAN CITY, TAIWAN

TEL: 886-6-5705168

FAX: 886-6-5705088

Taiwantrade Supplier Business Information Verification
TÜVRheinland CERTIFIED
www.tuv.com ID 0000063284

ISO 9001:2015

TaiwanTrade